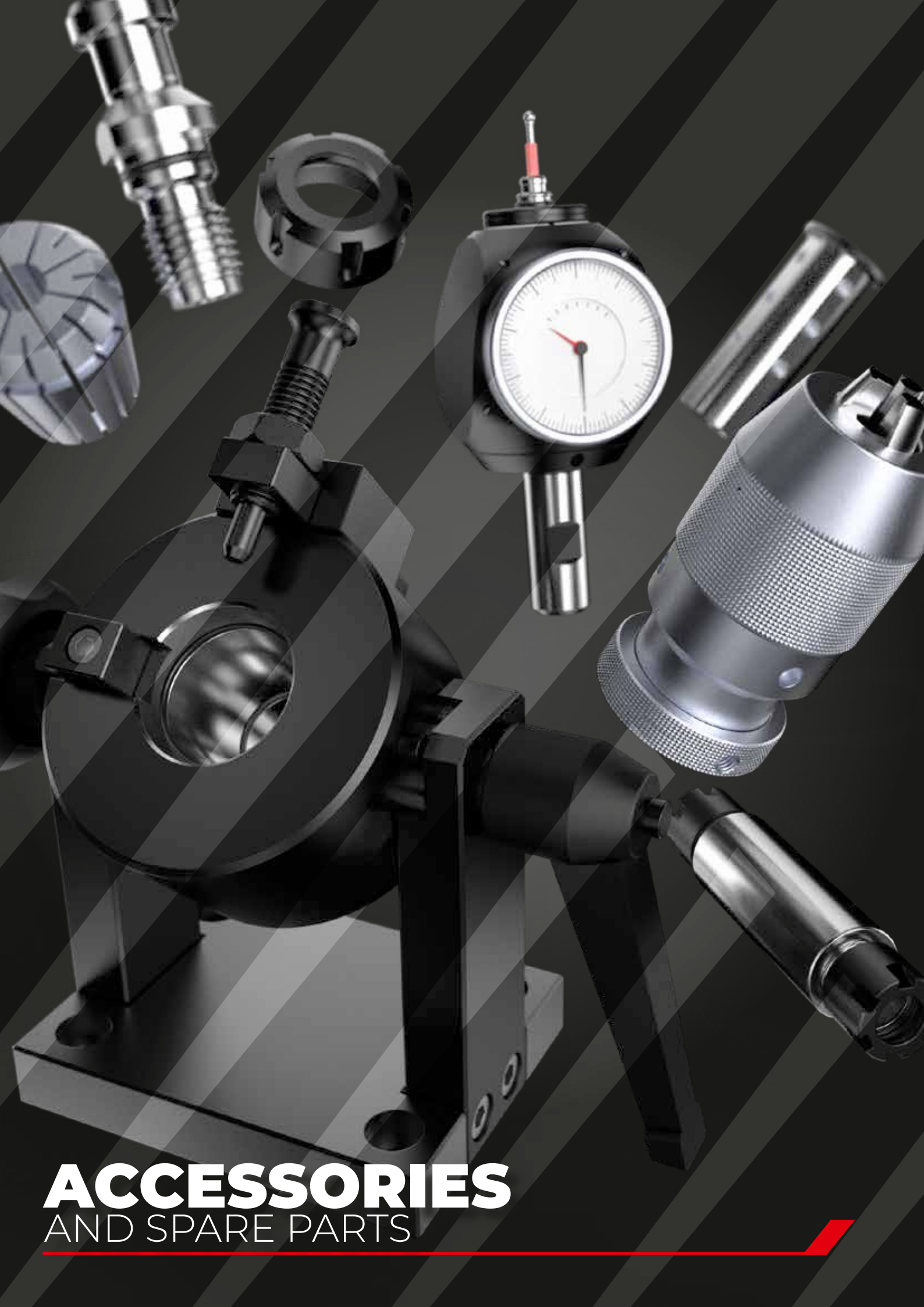

ACCESSORIES
AND SPARE PARTS

STRAIGHT SHANK ER COLLET CHUCKS WITH MINI NUT

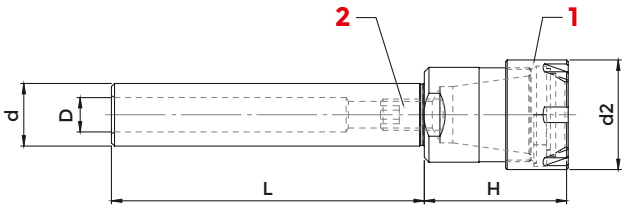

DIN 1835A

COD. (WITHOUT FLAT)	COD. (WITH FLAT)	DESCRIPTION	d	ER	H	d2	D	2 NUT	1 SCREW	WRENCH	COLLET
264-35114	-	d 5 - ER 8 GM / L 45	5	ER 8 1÷ 5	24	12	-	0373	-	816-203007	ER8
214-35101	-	d 6 - ER 8 GM / L 45	6	ER 8 1÷ 5	24	12	-	0373	-	816-203007	ER8
214-35139	-	d 6 - ER11 GM / L 45	6	ER 11 1÷ 8	25	16	-	0432	-	816-203008	ER11
264-35115	-	d 7 - ER11 GM / L 45	7	ER 11 1÷ 8	25	16	-	0432	-	816-203008	ER11
214-35102	-	d 8 - ER 8 GM / L 55	8	ER 8 1÷ 5	24	12	-	0373	-	816-203007	ER8
214-35108	-	d 8 - ER 8 GM / L 80	8	ER 8 1÷ 5	24	12	-	0373	-	816-203007	ER8
214-35714	-	d 8 - ER 8 GM / L 100	8	ER 8 1÷ 5	24	12	-	0373	-	816-203007	ER8
214-35715	-	d 8 - ER 8 GM / L 130	8	ER 8 1÷ 5	24	12	-	0373	-	816-203007	ER8
214-35109	-	d 8 - ER11 GM / L 55	8	ER 11 1÷ 8	25	16	-	0432	-	816-203008	ER11
264-35116	-	d 8 - ER11 GM / L 100	8	ER 11 1÷ 8	25	16	-	0432	-	816-203008	ER11
214-35716	-	d 8 - ER16 GM / L 55	8	ER 16 1÷12	37	22	-	1229	-	816-203009	ER16
214-35717	-	d 8 - ER16 GM / L 100	8	ER 16 1÷12	37	22	-	1229	-	816-203009	ER16
264-35117	-	d 10 - ER 8 GM / L 55	10	ER 8 1÷ 5	24	12	-	0373	811-102113	816-203007	ER8
214-35718	-	d 10 - ER 8 GM / L 80	10	ER 8 1÷ 5	24	12	-	0373	811-102113	816-203007	ER8
264-35118	-	d 10 - ER 8 GM / L 100	10	ER 8 1÷ 5	24	12	-	0373	811-102113	816-203007	ER8
214-35719	-	d 10 - ER 8 GM / L 130	10	ER 8 1÷ 5	24	12	-	0373	811-102113	816-203007	ER8
214-35110	-	d 10 - ER11 GM / L 55	10	ER 11 1÷ 8	25	16	5	0432	811-102113	816-203008	ER11
214-35720	-	d 10 - ER11 GM / L 80	10	ER 11 1÷ 8	25	16	5	0432	811-102113	816-203008	ER11
264-35119	-	d 10 - ER11 GM / L 100	10	ER 11 1÷ 8	25	16	5	0432	811-102113	816-203008	ER11
214-35721	-	d 10 - ER11 GM / L 130	10	ER 11 1÷ 8	25	16	5	0432	811-102113	816-203008	ER11
214-35113	-	d 10 - ER16 GM / L 60	10	ER 16 1÷12	37	22	5	1229	811-102113	816-203009	ER16
214-35722	-	d 10 - ER16 GM / L 80	10	ER 16 1÷12	37	22	5	1229	811-102113	816-203009	ER16
264-35120	-	d 10 - ER16 GM / L 100	10	ER 16 1÷12	37	22	5	1229	811-102113	816-203009	ER16
214-35723	-	d 12 - ER 8 GM / L 55	12	ER 8 1÷ 5	15	12	5	0373	811-102113	816-203007	ER8
214-35724	-	d 12 - ER 8 GM / L 70	12	ER 8 1÷ 5	15	12	5	0373	811-102113	816-203007	ER8
214-35140	-	d 12 - ER 8 GM / L 100	12	ER 8 1÷ 5	15	12	5	0373	811-102113	816-203007	ER8
264-35121	-	d 12 - ER 8 GM / L 140	12	ER 8 1÷ 5	15	12	5	0373	811-102113	816-203007	ER8
264-35122	-	d 12 - ER11 GM / L 55	12	ER 11 1÷ 8	25	16	7	0432	811-102114	816-203008	ER11
214-35141	-	d 12 - ER11 GM / L 70	12	ER 11 1÷ 8	25	16	7	0432	811-102114	816-203008	ER11
214-35142	-	d 12 - ER11 GM / L 100	12	ER 11 1÷ 8	25	16	7	0432	811-102114	816-203008	ER11
214-35143	-	d 12 - ER11 GM / L 140	12	ER 11 1÷ 8	25	16	7	0432	811-102114	816-203008	ER11
264-35123	-	d 12 - ER16 GM / L 55	12	ER 16 1÷12	37	22	7	1229	811-102114	816-203009	ER16
214-35114	-	d 12 - ER16 GM / L 80	12	ER 16 1÷12	37	22	7	1229	811-102114	816-203009	ER16
264-35124	-	d 12 - ER16 GM / L 120	12	ER 16 1÷12	37	22	7	1229	811-102114	816-203009	ER16
264-35125	-	d 15 - ER20 GM / L 100	15	ER 20 1÷15	41	28	9	1230	811-102030	816-203010	ER20
264-35126	0214	d 16 - ER11 GM / L 40	16	ER 11 1÷ 8	22	16	7	0432	811-102114	816-203008	ER11
214-35725	0292	d 16 - ER11 GM / L 60	16	ER 11 1÷ 8	22	16	7	0432	811-102114	816-203008	ER11
264-35127	0441	d 16 - ER11 GM / L 80	16	ER 11 1÷ 8	22	16	7	0432	811-102114	816-203008	ER11

follows >>

STRAIGHT SHANK ER COLLET CHUCKS WITH MINI NUT

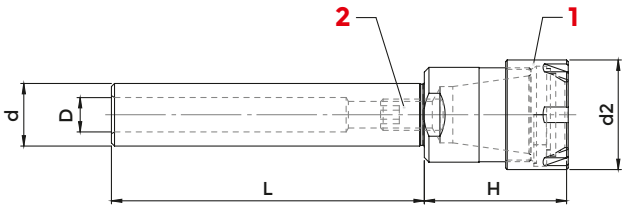

DIN 1835A

COD. (WITHOUT FLAT)	COD. (WITH FLAT)	DESCRIPTION	d	ER	H	d2	D	2 NUT	1 SCREW	WRENCH	COLLET
264-35128	2963	d 16 - ER11 GM / L 100	16	ER 11 1÷ 8	22	16	7	0432	811-102114	816-203008	ER11
264-35129	3903	d 16 - ER11 GM / L 130	16	ER 11 1÷ 8	22	16	7	0432	811-102114	816-203008	ER11
264-35130	D16H160ER11M	d 16 - ER11 GM / L 160	16	ER 11 1÷ 8	22	16	7	0432	811-102114	816-203008	ER11
214-35726	3913	d 16 - ER11 GM / L 200	16	ER 11 1÷ 8	22	16	7	0432	811-102114	816-203008	ER11
264-35131	2591	d 16 - ER16 GM / L 35	16	ER 16 1÷12	37	22	7	1229	811-102114	816-203009	ER16
264-35132	3211	d 16 - ER16 GM / L 60	16	ER 16 1÷12	37	22	7	1229	811-102114	816-203009	ER16
214-35115	3212	d 16 - ER16 GM / L 80	16	ER 16 1÷12	37	22	7	1229	811-102114	816-203009	ER16
214-35145	3226	d 16 - ER16 GM / L 100	16	ER 16 1÷12	37	22	7	1229	811-102114	816-203009	ER16
214-35146	3393	d 16 - ER16 GM / L 130	16	ER 16 1÷12	37	22	7	1229	811-102114	816-203009	ER16
214-35147	3490	d 16 - ER16 GM / L 160	16	ER 16 1÷12	37	22	7	1229	811-102114	816-203009	ER16
214-35727	2005	d 16 - ER16 GM / L 200	16	ER 16 1÷12	37	22	7	1229	811-102114	816-203009	ER16
264-35133	2895	d 16 - ER20 GM / L 55	16	ER 20 1÷15	40	28	9	1230	811-102030	816-203010	ER20
214-35148	3213	d 16 - ER20 GM / L 100	16	ER 20 1÷15	40	28	9	1230	811-102030	816-203010	ER20
264-35134	2982	d 16 - ER20 GM / L 130	16	ER 20 1÷15	40	28	9	1230	811-102030	816-203010	ER20
264-35135	2983	d 16 - ER20 GM / L 160	16	ER 20 1÷15	40	28	9	1230	811-102030	816-203010	ER20
-	214-35728	d 19,05 - ER11GM / L 50	19,05	ER 11 1÷ 8	18	16	7	0432	811-102114	816-203008	ER11
-	214-35729	d 19,05 - ER11GM / L 100	19,05	ER 11 1÷ 8	18	16	7	0432	811-102114	816-203008	ER11
-	214-35730	d 19,05 - ER16GM / L 60	19,05	ER 16 1÷12	30	22	11	1229	811-102038	816-203009	ER16
-	214-35731	d 19,05 - ER16GM / L 100	19,05	ER 16 1÷12	30	22	11	1229	811-102038	816-203009	ER16
-	214-35732	d 19,05 - ER20GM / L 50	19,05	ER 20 1÷15	37	28	11	1230	811-102038	816-203010	ER20
-	214-35733	d 19,05 - ER20GM / L 100	19,05	ER 20 1÷15	37	28	11	1230	811-102038	816-203010	ER20
-	214-35734	d 19,05 - ER25GM / L 50	19,05	ER 25 1÷20	46	35	11	1231	811-102038	816-203011	ER25
0216SP	264-35136	d 20 - ER11 GM / L 50	20	ER 11 1÷ 8	22	16	7	0432	811-102114	816-203008	ER11
1222SP	264-35137	d 20 - ER11 GM / L 100	20	ER 11 1÷ 8	22	16	7	0432	811-102114	816-203008	ER11
214-35736SP	214-35736	d 20 - ER11 GM / L 130	20	ER 11 1÷ 8	22	16	7	0432	811-102114	816-203008	ER11
2043SP	214-35737	d 20 - ER11 GM / L 160	20	ER 11 1÷ 8	22	16	7	0432	811-102114	816-203008	ER11
5144SP	214-35738	d 20 - ER11 GM / L 200	20	ER 11 1÷ 8	22	16	7	0432	811-102114	816-203008	ER11
214-35149SP	214-35149	d 20 - ER16 GM / L 60	20	ER 16 1÷12	30	22	11	1229	811-102038	816-203009	ER16
214-35150SP	214-35150	d 20 - ER16 GM / L 100	20	ER 16 1÷12	30	22	11	1229	811-102038	816-203009	ER16
264-35138SP	264-35138	d 20 - ER16 GM / L 130	20	ER 16 1÷12	30	22	11	1229	811-102038	816-203009	ER16
214-35151SP	214-35151	d 20 - ER16 GM / L 160	20	ER 16 1÷12	30	22	11	1229	811-102038	816-203009	ER16
264-35139SP	264-35139	d 20 - ER16 GM / L 200	20	ER 16 1÷12	30	22	11	1229	811-102038	816-203009	ER16
214-35739SP	214-35739	d 20 - ER16 GM / L 250	20	ER 16 1÷12	30	22	11	1229	811-102038	816-203009	ER16
3215SP	264-35140	d 20 - ER20 GM / L 46	20	ER 20 1÷15	37	28	11	1230	811-102038	816-203010	ER20
214-35152SP	214-35152	d 20 - ER20 GM / L 60	20	ER 20 1÷15	37	28	11	1230	811-102038	816-203010	ER20
214-35111SP	214-35111	d 20 - ER20 GM / L 100	20	ER 20 1÷15	37	28	11	1230	811-102038	816-203010	ER20
214-35153SP	214-35153	d 20 - ER20 GM / L 130	20	ER 20 1÷15	37	28	11	1230	811-102038	816-203010	ER20
214-35154SP	214-35154	d 20 - ER20 GM / L 160	20	ER 20 1÷15	37	28	11	1230	811-102038	816-203010	ER20

follows >>

STRAIGHT SHANK ER COLLET CHUCKS WITH MINI NUT

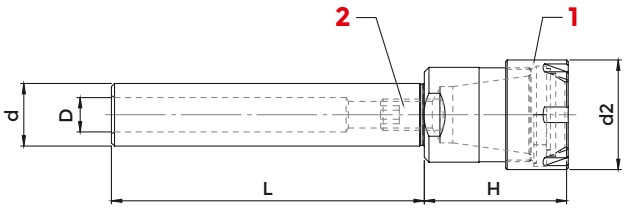

DIN 1835A

COD. (WITHOUT FLAT)	COD. (WITH FLAT)	DESCRIPTION	d	ER	H	d2	D	2 NUT	1 SCREW	WRENCH	COLLET
264-35141SP	264-35141	d 20 - ER20 GM / L 200	20	ER 20 1÷15	37	28	11	1230	811-102038	816-203010	ER20
214-35740SP	214-35740	d 20 - ER20 GM / L 250	20	ER 20 1÷15	37	28	11	1230	811-102038	816-203010	ER20
2899SP	264-35142	d 20 - ER25 GM / L 46	20	ER 25 1÷20	46	35	11	1231	811-102038	816-203011	ER25
214-35155SP	214-35155	d 20 - ER25 GM / L 60	20	ER 25 1÷20	46	35	11	1231	811-102038	816-203011	ER25
214-35116SP	214-35116	d 20 - ER25 GM / L 100	20	ER 25 1÷20	46	35	11	1231	811-102038	816-203011	ER25
214-35156SP	214-35156	d 20 - ER25 GM / L 130	20	ER 25 1÷20	46	35	11	1231	811-102038	816-203011	ER25
3319SP	214-35741	d 20 - ER25 GM / L 160	20	ER 25 1÷20	46	35	11	1231	811-102038	816-203011	ER25
-	214-35742	d 22 - ER16 GM / L 80	22	ER 16 1÷12	27	22	11	1229	811-102038	816-203009	ER16
-	214-35743	d 22 - ER20 GM / L 80	22	ER 20 1÷15	30	28	11	1230	811-102038	816-203010	ER20
0451SP	264-35143	d 25 - ER11 GM / L 100	25	ER 11 1÷ 8	18	16	7	0432	811-102114	816-203008	ER20
5145SP	214-35744	d 25 - ER11 GM / L 130	25	ER 11 1÷ 8	18	16	7	0432	811-102114	816-203008	ER11
5146SP	214-35745	d 25 - ER11 GM / L 160	25	ER 11 1÷ 8	18	16	7	0432	811-102038	816-203008	ER11
0218SP	264-35144	d 25 - ER16 GM / L 60	25	ER 16 1÷12	27	22	11	1229	811-102038	816-203009	ER16
0219SP	214-35157	d 25 - ER16 GM / L 100	25	ER 16 1÷12	27	22	11	1229	811-102038	816-203009	ER16
0231SP	264-35145	d 25 - ER16 GM / L 130	25	ER 16 1÷12	27	22	11	1229	811-102038	816-203009	ER16
3029SP	264-35146	d 25 - ER16 GM / L 160	25	ER 16 1÷12	27	22	11	1229	811-102038	816-203009	ER16
3063SP	214-35746	d 25 - ER16 GM / L 200	25	ER 16 1÷12	27	22	11	1229	811-102038	816-203009	ER16
3907SP	214-35158	d 25 - ER20 GM / L 60	25	ER 20 1÷15	28	28	13	1230	811-106005	816-203010	ER20
214-35159SP	214-35159	d 25 - ER20 GM / L 100	25	ER 20 1÷15	28	28	13	1230	811-106005	816-203010	ER20
0222SP	264-35147	d 25 - ER20 GM / L 130	25	ER 20 1÷15	28	28	13	1230	811-106005	816-203010	ER20
3219SP	214-35160	d 25 - ER20 GM / L 160	25	ER 20 1÷15	28	28	13	1230	811-106005	816-203010	ER20
4004SP	214-35747	d 25 - ER20 GM / L 200	25	ER 20 1÷15	28	28	13	1230	811-106005	816-203010	ER20
264-35148SP	264-35148	d 25 - ER25 GM / L 50	25	ER 25 1÷20	32	35	13	1231	811-106005	816-203011	ER25
3908SP	214-35161	d 25 - ER25 GM / L 70	25	ER 25 1÷20	32	35	13	1231	811-106005	816-203011	ER25
0426SP	264-35149	d 25 - ER25 GM / L 100	25	ER 25 1÷20	32	35	13	1231	811-106005	816-203011	ER25
0446SP	214-35162	d 25 - ER25 GM / L 130	25	ER 25 1÷20	32	35	13	1231	811-106005	816-203011	ER25
264-35150SP	264-35150	d 25 - ER25 GM / L 160	25	ER 25 1÷20	32	35	13	1231	811-106005	816-203011	ER25
0462SP	214-35748	d 25 - ER25 GM / L 200	25	ER 25 1÷20	32	35	13	1231	811-106005	816-203011	ER25
-	214-35749	d 25,4 - ER16 GM / L 60	25,4	ER 16 1÷12	27	22	11	1229	811-102038	816-203009	ER16
-	214-35750	d 25,4 - ER16 GM / L 100	25,4	ER 16 1÷12	27	22	11	1229	811-102038	816-203009	ER16
-	214-35752	d 25,4 - ER20 GM / L 70	25,4	ER 20 1÷15	28	28	13	1230	811-106005	816-203010	ER20
-	214-35753	d 25,4 - ER20 GM / L 100	25,4	ER 20 1÷15	28	28	13	1230	811-106005	816-203010	ER20
-	214-35755	d 25,4 - ER25 GM / L 70	25,4	ER 25 1÷20	32	35	13	1231	811-106005	816-203011	ER25
-	214-35756	d 25,4 - ER25 GM / L 100	25,4	ER 25 1÷20	32	35	13	1231	811-106005	816-203011	ER25
-	264-35151	d 32 - ER16 GM / L 90	32	ER 16 1÷12	30	22	11	1229	811-102038	816-203009	ER16
-	214-35163	d 32 - ER20 GM / L 90	32	ER 20 1÷15	28	28	13	1230	811-106005	816-203010	ER20

ACCESSORIES

p. 634

p. 617

p. 637

STRAIGHT SHANK ER DOUBLE COLLET CHUCKS WITH MINI NUT

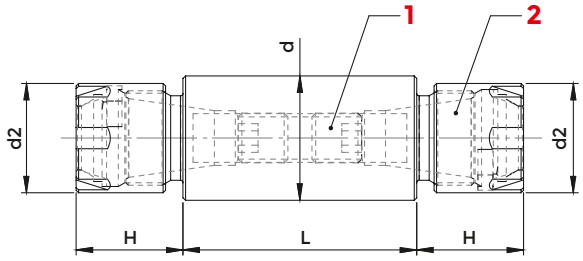

DIN 1835A

COD.	DESCRIPTION	d	H	L	d2	ER	2 NUT	1 SCREW	WRENCH	COLLET
264-35198	d 20 DP - ER 11 GM / L 42	20	14	70	16	ER 11 1÷ 8	0432	811-106015	816-203008	ER11
264-35199	d 20 DP - ER 11 GM / L 52	20	14	80	16	ER 11 1÷ 8	0432	811-102028	816-203008	ER11
214-35702	d 20 DP - ER 11 GM / L 62	20	14	90	16	ER 11 1÷ 8	0432	811-102028	816-203008	ER11
214-35703	d 20 DP - ER 16 GM / L 37	20	21,5	80	22	ER 16 1÷ 12	1229	-	816-203009	ER16
214-35704	d 20 DP - ER 16 GM / L 57	20	21,5	100	22	ER 16 1÷ 12	1229	811-106003	816-203009	ER16
214-35705	d 20 DP - ER 16 GM / L 67	20	21,5	110	22	ER 16 1÷ 12	1229	811-106004	816-203009	ER16
214-35706	d 20 DP - ER 16 GM / L 122	20	21,5	165	22	ER 16 1÷ 12	1229	811-106005	816-203009	ER16
214-35707	d 22 DP - ER 16 GM / L 47	22	21,5	90	22	ER 16 1÷ 12	1229	811-106003	816-203009	ER16
214-35708	d 22 DP - ER 16 GM / L 67	22	21,5	110	22	ER 16 1÷ 12	1229	811-106004	816-203009	ER16
214-35709	d 22 DP - ER 16 GM / L 102	22	21,5	145	22	ER 16 1÷ 12	1229	811-102038	816-203009	ER16
214-35710	d 25 DP - ER 16 GM / L 27	25	21,5	70	22	ER 16 1÷ 12	1229	-	816-203009	ER16
214-35711	d 25 DP - ER 16 GM / L 47	25	21,5	90	22	ER 16 1÷ 12	1229	811-106003	816-203009	ER16
214-35712	d 25 DP - ER 16 GM / L 67	25	21,5	110	22	ER 16 1÷ 12	1229	811-106004	816-203009	ER16
214-35713	d 25 DP - ER 20 GM / L 82	25	24	130	28	ER 20 1÷ 15	1230	811-102038	816-203010	ER20
264-35757	d 32 DP - ER 20 GM / L 57	32	24	105	28	ER 20 1÷ 15	1230	811-106003	816-203010	ER20
264-35758	d 32 DP - ER 20 GM / L 82	32	24	130	28	ER 20 1÷ 15	1230	811-102038	816-203010	ER20

ACCESSORIES

p. 634

p. 617

p. 637

STRAIGHT SHANK ER COLLET CHUCKS WITH HEXAGONAL NUT

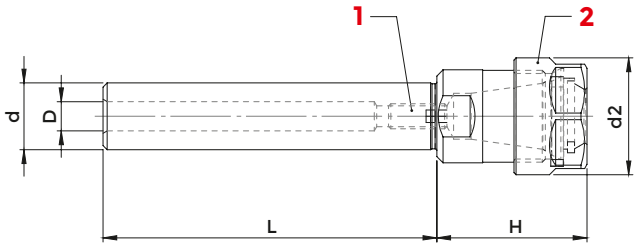

DIN 1835A

COD. (WITHOUT FLAT)	COD. (WITH FLAT)	DESCRIPTION	d	ER	H	d2	D	2 NUT	1 SCREW	WRENCH	COLLET
214-35783	-	d 14 - ER 16 GE / L 60	14	ER 16 1÷12	36	28	7	812-203009	811-102114	816-203012	ER16
214-35784	5245	d 16 - ER 16 GE / L 60	16	ER 16 1÷12	36	28	7	812-203009	811-102114	816-203012	ER16
214-35785	5246	d 16 - ER 16 GE / L 80	16	ER 16 1÷12	36	28	7	812-203009	811-102114	816-203012	ER16
214-35786	5247	d 16 - ER 16 GE / L 100	16	ER 16 1÷12	36	28	7	812-203009	811-102114	816-203012	ER16
214-35787	5248	d 16 - ER 16 GE / L 130	16	ER 16 1÷12	36	28	7	812-203009	811-102114	816-203012	ER16
214-35788	5249	d 16 - ER 16 GE / L 160	16	ER 16 1÷12	36	28	7	812-203009	811-102114	816-203012	ER16
214-35790	5251	d 16 - ER 20 GE / L 60	16	ER 20 1÷15	40	34	9	812-203010	811-102030	816-203013	ER20
-	214-35791	d 19,05 - ER 16 GE / L 50	19,05	ER 16 1÷12	32	28	11	812-203009	811-102038	816-203012	ER16
-	214-35792	d 19,05 - ER 16 GE / L 100	19,05	ER 16 1÷12	32	28	11	812-203009	811-102038	816-203012	ER16
-	214-35793	d 19,05 - ER 20 GE / L 50	19,05	ER 20 1÷15	36	34	11	812-203010	811-102038	816-203013	ER20
5256SP	214-35795	d 20 - ER 16 GE / L 50	20	ER 16 1÷12	31	28	11	812-203009	811-102038	816-203012	ER16
5257SP	214-35796	d 20 - ER 16 GE / L 100	20	ER 16 1÷12	31	28	11	812-203009	811-102038	816-203012	ER16
5258SP	214-35797	d 20 - ER 16 GE / L 130	20	ER 16 1÷12	31	28	11	812-203009	811-102038	816-203012	ER16
5259SP	214-35798	d 20 - ER 16 GE / L 160	20	ER 16 1÷12	31	28	11	812-203009	811-102038	816-203012	ER16
5260SP	214-35799	d 20 - ER 16 GE / L 200	20	ER 16 1÷12	31	28	11	812-203009	811-102038	816-203012	ER16
5261SP	264-35701	d 20 - ER 20 GE / L 46	20	ER 20 1÷15	36	34	11	812-203010	811-102038	816-203013	ER20
5262SP	264-35702	d 20 - ER 20 GE / L 60	20	ER 20 1÷15	36	34	11	812-203010	811-102038	816-203013	ER20
5263SP	264-35703	d 20 - ER 20 GE / L 100	20	ER 20 1÷15	36	34	11	812-203010	811-102038	816-203013	ER20
5264SP	264-35704	d 20 - ER 20 GE / L 130	20	ER 20 1÷15	36	34	11	812-203010	811-102038	816-203013	ER20
5265SP	264-35705	d 20 - ER 20 GE / L 160	20	ER 20 1÷15	36	34	11	812-203010	811-102038	816-203013	ER20
5266SP	264-35706	d 20 - ER 20 GE / L 200	20	ER 20 1÷15	36	34	11	812-203010	811-102038	816-203013	ER20
-	264-35707	d 22 - ER 16 GE / L 80	22	ER 16 1÷12	26	28	11	812-203009	811-102038	816-203012	ER16
-	264-35708	d 22 - ER 20 GE / L 80	22	ER 20 1÷15	36	34	11	812-203010	811-102038	816-203013	ER20
5269SP	264-35709	d 25 - ER 16 GE / L 60	25	ER 16 1÷12	27	28	11	812-203009	811-102038	816-203012	ER16
5270SP	264-35710	d 25 - ER 16 GE / L 100	25	ER 16 1÷12	27	28	11	812-203009	811-102038	816-203012	ER16
5271SP	264-35711	d 25 - ER 16 GE / L 130	25	ER 16 1÷12	27	28	11	812-203009	811-102038	816-203012	ER16
-	264-35712	d 25 - ER 16 GE / L 160	25	ER 16 1÷12	27	28	11	812-203009	811-102038	816-203012	ER16
5274SP	264-35714	d 25 - ER 20 GE / L 60	25	ER 20 1÷15	28	34	13	812-203010	811-106005	816-203013	ER20
5275SP	264-35715	d 25 - ER 20 GE / L 100	25	ER 20 1÷15	28	34	13	812-203010	811-106005	816-203013	ER20

follows >>

STRAIGHT SHANK ER COLLET CHUCKS WITH HEXAGONAL NUT

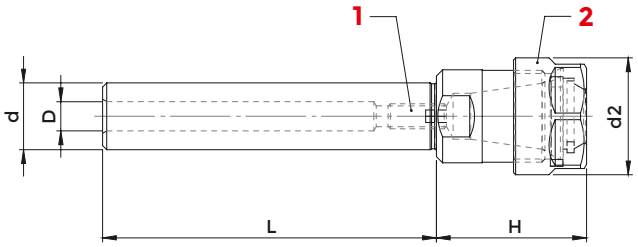

DIN 1835A

COD. (WITHOUT FLAT)	COD. (WITH FLAT)	DESCRIPTION	d	ER	H	d2	D	2 NUT	1 SCREW	WRENCH	COLLET
5276SP	264-35716	d 25 - ER 20 GE / L 130	25	ER 20 1÷15	28	34	13	812-203010	811-106005	816-203013	ER20
5277SP	264-35717	d 25 - ER 20 GE / L 160	25	ER 20 1÷15	28	34	13	812-203010	811-106005	816-203013	ER20
-	264-35718	d 25,4 - ER 16 GE / L 60	25,4	ER 16 1÷12	27	28	11	812-203009	811-102038	816-203012	ER16
-	264-35719	d 25,4 - ER 16 GE / L 100	25,4	ER 16 1÷12	27	28	11	812-203009	811-102038	816-203012	ER16
-	264-35720	d 25,4 - ER 20 GE / L 60	25,4	ER 20 1÷15	28	34	13	812-203010	811-106005	816-203013	ER20
-	264-35721	d 25,4 - ER 20 GE / L 100	25,4	ER 20 1÷15	28	34	13	812-203010	811-106005	816-203013	ER20
-	264-35722	d 32 - ER 16 GE / L 100	32	ER 16 1÷12	27	28	11	812-203009	811-102038	816-203012	ER16
-	264-35723	d 32 - ER 16 GE / L 150	32	ER 16 1÷12	27	28	11	812-203009	811-102038	816-203012	ER16
-	264-35724	d 32 - ER 20 GE / L 100	32	ER 20 1÷15	28	34	13	812-203010	811-106005	816-203013	ER20
-	264-35725	d 32 - ER 20 GE / L 150	32	ER 20 1÷15	28	34	13	812-203010	811-106005	816-203013	ER20

ACCESSORIES

p. 635

p. 617

p. 638

STRAIGHT SHANK ER COLLET CHUCKS WITH STANDARD NUT

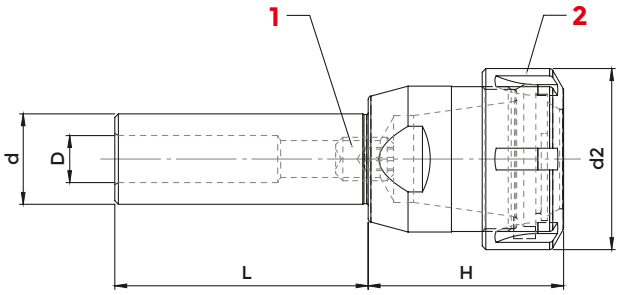

DIN 1835A

COD. (WITHOUT FLAT)	COD. (WITH FLAT)	DESCRIPTION	d	ER	H	d2	D	2 NUT	1 SCREW	WRENCH	COLLET
264-35152	-	d 14 - ER 16 / L 60	14	ER 16 1÷12	36	32	7	812-203005	811-102114	816-203000	ER16
3916SP	3916	d 16 - ER 16 / L 60	16	ER 16 1÷12	36	32	7	812-203005	811-102114	816-203000	ER16
214-35758	5009	d 16 - ER 16 / L 80	16	ER 16 1÷12	36	32	7	812-203005	811-102114	816-203000	ER16
214-35126	3185	d 16 - ER 16 / L 100	16	ER 16 1÷12	36	32	7	812-203005	811-102114	816-203000	ER16
214-35759	5087	d 16 - ER 16 / L 130	16	ER 16 1÷12	36	32	7	812-203005	811-102114	816-203000	ER16
3206SP	3206	d 16 - ER 16 / L 160	16	ER 16 1÷12	36	32	7	812-203005	811-102114	816-203000	ER16
264-35153	3529	d 16 - ER 20 / L 60	16	ER 20 1÷15	40	35	9	812-203006	811-102030	816-203005	ER20
264-35154	0573	d 16 - ER 25 / L 35	16	ER 25 1÷20	46	42	9	812-203001	811-102030	816-203001	ER25
264-35155	0574	d 16 - ER 25 / L 70	16	ER 25 1÷20	46	42	9	812-203001	811-102030	816-203001	ER25
-	214-35762	d 19,05 - ER16 / L 50	19,05	ER 16 1÷12	32	32	11	812-203005	811-102038	816-203000	ER16
-	214-35763	d 19,05 - ER16 / L 100	19,05	ER 16 1÷12	32	32	11	812-203005	811-102038	816-203000	ER16
-	214-35764	d 19,05 - ER20 / L 50	19,05	ER 20 1÷15	36	35	11	812-203006	811-102038	816-203005	ER20
-	214-35766	d 19,05 - ER25 / L 50	19,05	ER 25 1÷20	46	42	11	812-203001	811-102038	816-203001	ER25
-	214-35768	d 19,05 - ER32 / L 50	19,05	ER 32 2÷25	54	50	13	812-203002	811-106005	816-203002	ER32
3917SP	264-35156	d 20 - ER 16 / L 50	20	ER 16 1÷12	31	32	11	812-203005	811-102038	816-203000	ER16
214-35127SP	214-35127	d 20 - ER 16 / L 100	20	ER 16 1÷12	31	32	11	812-203005	811-102038	816-203000	ER16
5098SP	214-35770	d 20 - ER 16 / L 130	20	ER 16 1÷12	31	32	11	812-203005	811-102038	816-203000	ER16
3228SP	264-35157	d 20 - ER 16 / L 160	20	ER 16 1÷12	31	32	11	812-203005	811-102038	816-203000	ER16
5099SP	214-35771	d 20 - ER 16 / L 200	20	ER 16 1÷12	31	32	11	812-203005	811-102038	816-203000	ER16
3919SP	264-35158	d 20 - ER 20 / L 46	20	ER 20 1÷15	36	35	11	812-203006	811-102038	816-203005	ER20
3920SP	264-35159	d 20 - ER 20 / L 60	20	ER 20 1÷15	36	35	11	812-203006	811-102038	816-203005	ER20
264-35160SP	264-35160	d 20 - ER 20 / L 100	20	ER 20 1÷15	36	35	11	812-203006	811-102038	816-203005	ER20
5147SP	214-35772	d 20 - ER 20 / L 130	20	ER 20 1÷15	36	35	11	812-203006	811-102038	816-203005	ER20
5148SP	214-35773	d 20 - ER 20 / L 160	20	ER 20 1÷15	36	35	11	812-203006	811-102038	816-203005	ER20
5149SP	214-35774	d 20 - ER 20 / L 200	20	ER 20 1÷15	36	35	11	812-203006	811-102038	816-203005	ER20
214-35119SP	214-35119	d 20 - ER 25 / L 50	20	ER 25 1÷20	46	42	11	812-203001	811-102038	816-203001	ER25
214-35128SP	214-35128	d 20 - ER 25 / L 100	20	ER 25 1÷20	46	42	11	812-203001	811-102038	816-203001	ER25
3911SP	264-35162	d 20 - ER 25 / L 160	20	ER 25 1÷20	46	42	11	812-203001	811-102038	816-203001	ER25
3203SP	264-35163	d 20 - ER 32 / L 50	20	ER 32 2÷25	54	50	13	812-203002	811-106005	816-203002	ER32
214-35129SP	214-35129	d 20 - ER 32 / L 100	20	ER 32 2÷25	54	50	13	812-203002	811-106005	816-203002	ER32
3931SP	264-35164	d 20 - ER 32 / L 130	20	ER 32 2÷25	54	50	13	812-203002	811-106005	816-203002	ER32
3932SP	264-35165	d 20 - ER 32 / L 160	20	ER 32 2÷25	54	50	13	812-203002	811-106005	816-203002	ER32
-	264-35166	d 22 - ER 16 / L 80	22	ER 16 1÷12	26	32	11	812-203005	811-102038	816-203000	ER16
-	264-35167	d 22 - ER 20 / L 80	22	ER 20 1÷15	36	35	11	812-203006	811-102038	816-203005	ER20
-	264-35168	d 22 - ER 25 / L 50	22	ER 25 1÷20	42	42	13	812-203001	811-106005	816-203001	ER25
-	264-35170	d 22 - ER 32 / L 50	22	ER 32 2÷25	53	50	13	812-203002	811-106005	816-203002	ER32

follows >>

STRAIGHT SHANK ER COLLET CHUCKS WITH STANDARD NUT

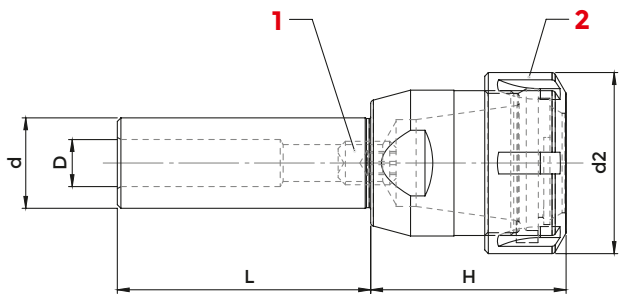

DIN 1835A

COD. (WITHOUT FLAT)	COD. (WITH FLAT)	DESCRIPTION	d	ER	H	d2	D	2 NUT	1 SCREW	WRENCH	COLLET
5163SP	214-35775	d 25 - ER 16 / L 60	25	ER 16 1÷12	27	32	11	812-203005	811-102038	816-203000	ER16
5164SP	214-35776	d 25 - ER 16 / L 100	25	ER 16 1÷12	27	32	11	812-203005	811-102038	816-203000	ER16
5165SP	214-35777	d 25 - ER 16 / L 130	25	ER 16 1÷12	27	32	11	812-203005	811-102038	816-203000	ER16
-	214-35778	d 25 - ER 16 / L 160	25	ER 16 1÷12	27	32	11	812-203005	811-102038	816-203000	ER16
0230SP	264-35171	d 25 - ER 20 / L 60	25	ER 20 1÷15	28	35	13	812-203006	811-106005	816-203005	ER20
0383SP	264-35172	d 25 - ER 20 / L 100	25	ER 20 1÷15	28	35	13	812-203006	811-106005	816-203005	ER20
5168SP	214-35780	d 25 - ER 20 / L 130	25	ER 20 1÷15	28	35	13	812-203006	811-106005	816-203005	ER20
5169SP	214-35781	d 25 - ER 20 / L 160	25	ER 20 1÷15	28	35	13	812-203006	811-106005	816-203005	ER20
3923SP	214-35120	d 25 - ER 25 / L 50	25	ER 25 1÷20	32	42	13	812-203001	811-106005	816-203001	ER25
5183SP	214-35782	d 25 - ER 25 / L 70	25	ER 25 1÷20	32	42	13	812-203001	811-106005	816-203001	ER25
0391SP	214-35130	d 25 - ER 25 / L 100	25	ER 25 1÷20	32	42	13	812-203001	811-106005	816-203001	ER25
0392SP	264-35173	d 25 - ER 25 / L 130	25	ER 25 1÷20	32	42	13	812-203001	811-106005	816-203001	ER25
0393SP	264-35174	d 25 - ER 25 / L 160	25	ER 25 1÷20	32	42	13	812-203001	811-106005	816-203001	ER25
1216SP	264-35175	d 25 - ER 32 / L 50	25	ER 32 2÷25	54	50	13	812-203002	811-106005	816-203002	ER32
1221SP	264-35176	d 25 - ER 32 / L 70	25	ER 32 2÷25	54	50	13	812-203002	811-106005	816-203002	ER32
214-35131SP	214-35131	d 25 - ER 32 / L 100	25	ER 32 2÷25	54	50	13	812-203002	811-106005	816-203002	ER32
3927SP	264-35177	d 25 - ER 32 / L 130	25	ER 32 2÷25	54	50	13	812-203002	811-106005	816-203002	ER32
3928SP	264-35178	d 25 - ER 32 / L 160	25	ER 32 2÷25	54	50	13	812-203002	811-106005	816-203002	ER32
2901SP	264-35179	d 25 - ER 40 / L 50	25	ER 40 3÷32	60	63	16	812-203003	811-106005	816-203003	ER40
3266SP	264-35180	d 25 - ER 40 / L 100	25	ER 40 3÷32	60	63	16	812-203003	811-106005	816-203003	ER40
-	264-35726	d 25,4 - ER 16 / L 60	25,4	ER 16 1÷12	27	32	11	812-203005	811-102038	816-203000	ER16
-	264-35727	d 25,4 - ER 16 / L 100	25,4	ER 16 1÷12	27	32	11	812-203005	811-102038	816-203000	ER16
-	264-35728	d 25,4 - ER 20 / L 60	25,4	ER 20 1÷15	28	35	13	812-203006	811-106005	816-203005	ER20
-	264-35729	d 25,4 - ER 20 / L 100	25,4	ER 20 1÷15	28	35	13	812-203006	811-106005	816-203005	ER20
-	264-35730	d 25,4 - ER 25 / L 50	25,4	ER 25 1÷20	32	42	13	812-203001	811-106005	816-203001	ER25
-	264-35731	d 25,4 - ER 25 / L 70	25,4	ER 25 1÷20	32	42	13	812-203001	811-106005	816-203001	ER25
-	264-35732	d 25,4 - ER 25 / L 100	25,4	ER 25 1÷20	32	42	13	812-203001	811-106005	816-203001	ER25
-	264-35733	d 25,4 - ER 32 / L 50	25,4	ER 32 2÷25	54	50	16	812-203002	811-106005	816-203002	ER32
-	264-35734	d 25,4 - ER 32 / L 70	25,4	ER 32 2÷25	54	50	16	812-203002	811-106005	816-203002	ER32
-	264-35735	d 25,4 - ER 32 / L 100	25,4	ER 32 2÷25	54	50	16	812-203002	811-106005	816-203002	ER32
-	264-35736	d 25,4 - ER 40 / L 50	25,4	ER 40 3÷32	54	50	16	812-203003	811-106005	816-203003	ER40
-	264-35181	d 30 - ER 25 / L 50	30	ER 25 1÷20	45	42	19	812-203001	0190	816-203001	ER25
-	264-35182	d 30 - ER 32 / L 50	30	ER 32 2÷25	53	50	23	812-203002	811-303118	816-203002	ER32
-	264-35737	d 31,75 - ER32 / L 50	31,75	ER 32 2÷25	44	50	23	812-203002	811-303118	816-203002	ER32
-	264-35738	d 31,75 - ER40 / L 50	31,75	ER 40 3÷32	60	63	23	812-203003	811-303118	816-203003	ER40
-	264-35739	d 32 - ER 16 / L 100	32	ER 16 1÷12	27	32	11	812-203005	811-102038	816-203000	ER16
-	264-35740	d 32 - ER 16 / L 150	32	ER 16 1÷12	27	32	11	812-203005	811-102038	816-203000	ER16

follows >>

STRAIGHT SHANK ER COLLET CHUCKS WITH STANDARD NUT

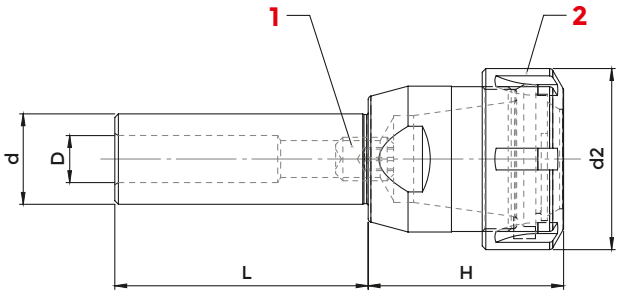

DIN 1835A

COD. (WITHOUT FLAT)	COD. (WITH FLAT)	DESCRIPTION	d	ER	H	d2	D	2 NUT	1 SCREW	WRENCH	COLLET
-	264-35741	d 32 - ER 20 / L 100	32	ER 20 1÷15	28	35	13	812-203006	811-106005	816-203005	ER20
-	264-35742	d 32 - ER 20 / L 150	32	ER 20 1÷15	28	35	13	812-203006	811-106005	816-203005	ER20
-	214-35132	d 32 - ER 25 / L 70	32	ER 25 1÷20	28	42	19	812-203001	0190	816-203001	ER25
-	264-35743	d 32 - ER 25 / L 100	32	ER 25 1÷20	28	42	19	812-203001	0190	816-203001	ER25
-	264-35184	d 32 - ER 25 / L 120	32	ER 25 1÷20	28	42	19	812-203001	0190	816-203001	ER25
-	264-35185	d 32 - ER 32 / L 50	32	ER 32 2÷25	38	50	23	812-203002	811-303118	816-203002	ER32
-	214-35117	d 32 - ER 32 / L 70	32	ER 32 2÷25	38	50	23	812-203002	811-303118	816-203002	ER32
-	264-35186	d 32 - ER 32 / L 100	32	ER 32 2÷25	38	50	23	812-203002	811-303118	816-203002	ER32
-	214-35133	d 32 - ER 32 / L 120	32	ER 32 2÷25	38	50	23	812-203002	811-303118	816-203002	ER32
-	214-35134	d 32 - ER 32 / L 150	32	ER 32 2÷25	38	50	23	812-203002	811-303118	816-203002	ER32
-	264-35188	d 32 - ER 40 / L 70	32	ER 40 3÷32	60	63	23	812-203003	811-303118	816-203003	ER40
-	264-35745	d 32 - ER 40 / L 100	32	ER 40 3÷32	60	63	23	812-203003	811-303118	816-203003	ER40
-	264-35746	d 32 - ER 40 / L 130	32	ER 40 3÷32	60	63	23	812-203003	811-303118	816-203003	ER40
-	264-35747	d 35 - ER 32 / L 80	35	ER 32 2÷25	38	50	23	812-203002	811-303118	816-203002	ER32
-	264-35189	d 40 - ER 25 / L 70	40	ER 25 1÷20	42	42	19	812-203001	0190	816-203001	ER25
-	214-35135	d 40 - ER 25 / L 120	40	ER 25 1÷20	42	42	19	812-203001	0190	816-203001	ER25
-	214-35136	d 40 - ER 32 / L 70	40	ER 32 2÷25	30	50	23	812-203002	811-303118	816-203002	ER32
-	264-35748	d 40 - ER 32 / L 100	40	ER 32 2÷25	30	50	23	812-203002	811-303118	816-203002	ER32
-	214-35137	d 40 - ER 32 / L 130	40	ER 32 2÷25	30	50	23	812-203002	811-303118	816-203002	ER32
-	264-35749	d 40 - ER 32 / L 160	40	ER 32 2÷25	30	50	23	812-203002	811-303118	816-203002	ER32
-	264-35190	d 40 - ER 40 / L 50	40	ER 40 3÷32	60	63	28	812-203003	0195	816-203003	ER40
-	214-35138	d 40 - ER 40 / L 80	40	ER 40 3÷32	60	63	28	812-203003	0195	816-203003	ER40
-	264-35191	d 40 - ER 40 / L 130	40	ER 40 3÷32	60	63	28	812-203003	0195	816-203003	ER40
-	264-35750	d 44,45 - ER32 / L 160	44,45	ER 32 2÷25	33	50	23	812-203002	811-303118	816-203002	ER32
-	264-35751	d 44,45 - ER40 / L 160	44,45	ER 40 3÷32	40	63	28	812-203003	0195	816-203003	ER40
-	264-35192	d 50 - ER 32 / L 125	50	ER 32 2÷25	32	50	23	812-203002	811-303118	816-203002	ER32
-	264-35193	d 50 - ER 32 / L 160	50	ER 32 2÷25	32	50	23	812-203002	811-303118	816-203002	ER32
-	264-35752	d 50 - ER 40 / L 125	50	ER 40 3÷32	37	63	28	812-203003	0195	816-203003	ER40
-	264-35194	d 50 - ER 40 / L 160	50	ER 40 3÷32	37	63	28	812-203003	0195	816-203003	ER40
-	264-35753	d 50,8 - ER 32 / L 160	50,8	ER 32 2÷25	32	50	23	812-203002	811-303118	816-203002	ER32
-	264-35754	d 50,8 - ER 40 / L 160	50,8	ER 40 3÷32	37	63	28	812-203003	0195	816-203003	ER40
-	264-35755	d 60 - ER 32 / L 160	60	ER 32 2÷25	32	50	23	812-203002	811-303118	816-203002	ER32
-	264-35756	d 60 - ER 40 / L 160	60	ER 40 3÷32	37	63	28	812-203003	0195	816-203003	ER40

ACCESSORIES

p. 635

p. 617

p. 638

WELDON SHANK ER COLLET CHUCKS WITH STANDARD NUT

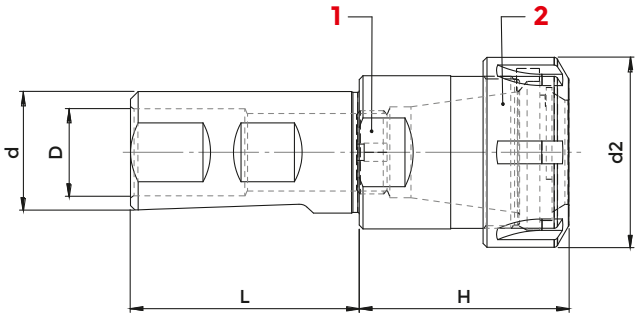

DIN 1835 B+E

COD.	DESCRIPTION	d	H	L	d2	D	ER	2 NUT	1 SCREW	WRENCH	COLLET
214-35214	WE 20 - ER 32 / H 55	20	55	50	50	11	ER 32 2÷25	812-203002	811-102038	816-203002	ER32
214-35215	WE 20 - ER 32 / H 100	20	100	50	50	11	ER 32 2÷25	812-203002	811-102038	816-203002	ER32
214-35216	WE 25 - ER 32 / H 55	25	55	56	50	13	ER 32 2÷25	812-203002	811-106005	816-203002	ER32
214-35217	WE 25 - ER 32 / H 100	25	100	56	50	13	ER 32 2÷25	812-203002	811-106005	816-203002	ER32
214-35218	WE 32 - ER 32 / H 55	32	55	60	50	23	ER 32 2÷25	812-203002	811-303118	816-203002	ER32
214-35219	WE 32 - ER 32 / H 100	32	100	60	50	23	ER 32 2÷25	812-203002	811-303118	816-203002	ER32

ACCESSORIES

p. 635 p. 617 p. 638

STRAIGHT SHANK ER COLLET CHUCKS WITH COOLING HOLES - STANDARD NUT

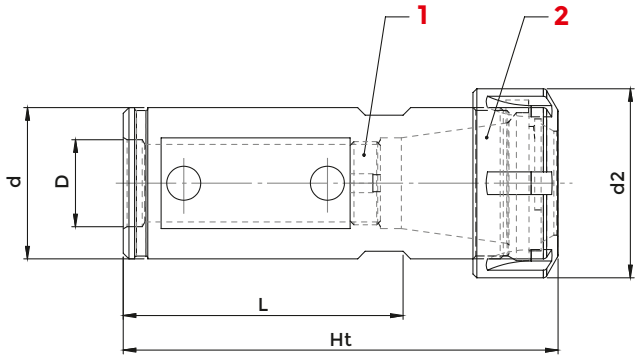

DIN 1835 A

COD.	DESCRIPTION	d	H	L	d2	D	ER	2 NUT	1 SCREW	WRENCH	COLLET
214-35170	d 32 NC - ER 25	32	42	110	70	19	ER 25 1÷20	812-203001	0190	816-203001	ER25
214-35171	d 32 NC - ER 32	32	50	118	70	23	ER 32 2÷25	812-203002	811-303118	816-203002	ER32
214-35172	d 40 NC - ER 32	40	50	115	75	23	ER 32 2÷25	812-203002	811-303118	816-203002	ER32
214-35173	d 40 NC - ER 40	40	63	130	75	23	ER 40 3÷32	812-203003	811-303118	816-203003	ER40

ACCESSORIES

p. 635 p. 617 p. 638

STRAIGHT SHANK ER COLLET CHUCKS WITH INNER NUT

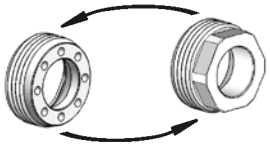

Nut "**GA**" type can be replaced by nut "**GA-E**" type (p. 637) with hexagonal wrench hold.

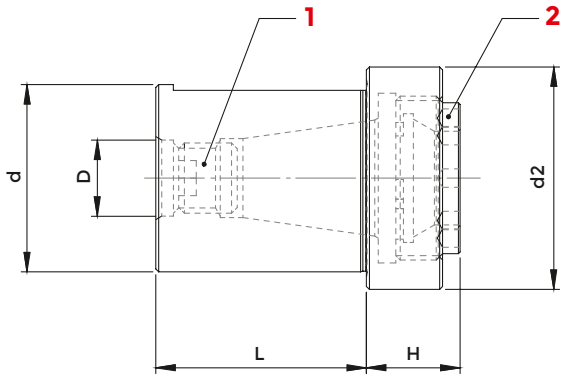

DIN 1835 A

COD.	DESCRIPTION	d	ER	H	L	d2	D	2 NUT	1 SCREW	WRENCH	COLLET
2939	d 20 - ER 16 GA	20	ER 16 1÷12	14	34	32	11	2868	811-106003	CHER16EX	ER16
3200	d 25 - ER 20 GA	25	ER 20 1÷15	18	34	38	13	2869	811-106013	3171	ER20
2940	d 32 - ER 20 GA	32	ER 20 1÷15	16	36	38	13	2869	811-106013	3171	ER20
2942	d 32 - ER 25 GA	32	ER 25 1÷20	19	36	40	19	812-203057	0190	CHER25EX	ER25
2943	d 40 - ER 32 GA	40	ER 32 2÷25	21	45	48	23	812-203032	811-303118	CHER32EX	ER32

ACCESSORIES

p. 636

p. 617

p. 636

SHANKS FOR KEYLESS DRILL CHUCKS

DIN 238 shank keyless drill chucks you can find at p. 601

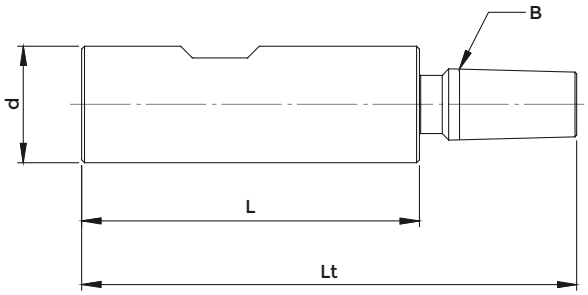

DIN 238

COD.	DESCRIPTION	d	B	L	Lt
402308B10	d 8 - B 10	8	10	35	55
402310B10	d 10 - B 10	10	10	50	70
402310B12	d 10 - B 12	10	12	50	75
402310B16	d 10 - B 16	10	16	50	82
402312B16	d 12 - B 16	12	16	50	82
402312B16L	d 12 - B 16	12	16	60	92
402316B16	d 16 - B 16	16	16	50	81
402316B16L	d 16 - B 16	16	16	70	101
402320B12	d 20 - B 12	20	12	60	85
402320B16	d 20 - B 16	20	16	60	92
402320B18	d 20 - B 18	20	18	60	100
402325B16	d 25 - B 16	25	16	75	107

STRAIGHT SHANK DRILL CHUCKS - RIGHT SPIN

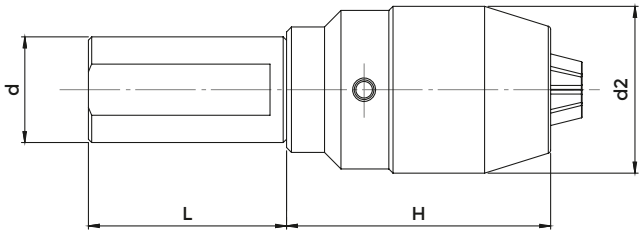

DIN 1835 A

COD.	DESCRIPTION	d	ER	H	L	d2	CLAMPS	SCREW	WRENCH
*1419	d 20 - DC 13	20	0,5 ÷ 13	50	80	60	9016	9021	2370
1422	d 25 - DC 13	25	0,5 ÷ 13	50	80	80	9016	9021	2370
1425	d 32 - DC 13	32	0,5 ÷ 13	50	80	60	9016	9021	2370
1426	d 32 - DC 16	32	3 ÷ 16	57	85	60	9017	9023	2371
1427	d 40 - DC 13	40	0,5 ÷ 13	50	80	70	9016	9021	2370
1428	d 40 - DC 16	40	3 ÷ 16	57	85	70	9017	9023	2371

*Supplied only with cylindrical connection WITHOUT FLAT
Supplied complete with suitable wrench

STRAIGHT SHANK DRILL CHUCKS - LEFT & RIGHT SPIN

Straight shank adapters to DIN238 you can find at p. 577

DIN 238 shank keyless drill chucks you can find at p. 601

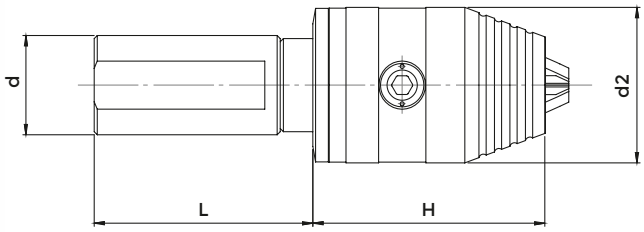

DIN 1835 A

COD.	DESCRIPTION	d	ER	H	L	d2	CLAMPS	SCREW	WRENCH
8607	d 25 - DCU13	25	0,5 ÷ 13	50	85	70	832-012020	9021	816-152001
8608	d 25 - DCU16	25	3 ÷ 16	50	89	70	832-012020	9021	816-152001
252-15709	d 32 - DCU13	32	0,5 ÷ 13	50	85	60	832-012020	9021	816-152001
252-15710	d 32 - DCU16	32	3 ÷ 16	57	89	60	832-012021	9023	816-152001
252-15711	d 40 - DCU13	40	0,5 ÷ 13	50	85	70	832-012020	9021	816-152001
252-15712	d 40 - DCU16	40	3 ÷ 16	57	89	70	832-012021	9023	816-152001

Supplied complete with suitable wrench

CYLINDRICAL SHANK WELDON REDUCTION SLEEVES

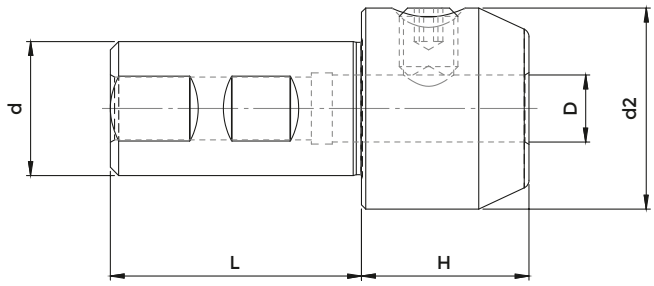

DIN 1835 B

COD.	DESCRIPTION	d	D	H	L	d2	SCREW
213-15203	WE 20 - d 6	20	6	30	50	25	811-106001
213-15204	WE 20 - d 8	20	8	30	50	28	811-106002
213-15205	WE 20 - d 10	20	10	30	50	35	811-106004
213-15206	WE 20 - d 12	20	12	35	50	42	811-106005
213-15207	WE 20 - d 14	20	14	35	50	44	811-106005
213-15208	WE 20 - d 16	20	16	60	50	48	811-106006
213-15209	WE 25 - d 6	25	6	25	56	25	811-106001
213-15210	WE 25 - d 8	25	8	30	56	28	811-106002
213-15211	WE 25 - d 10	25	10	30	56	35	811-106004
213-15212	WE 25 - d 12	25	12	35	56	42	811-106005
213-15213	WE 25 - d 14	25	14	35	56	44	811-106005
213-15214	WE 25 - d 16	25	16	40	56	48	811-106006
213-15215	WE 32 - d 6	32	6	30	60	25	811-106001
213-15216	WE 32 - d 8	32	8	30	60	28	811-106002
213-15217	WE 32 - d 10	32	10	30	60	35	811-106004
213-15218	WE 32 - d 12	32	12	35	60	42	811-106005
213-15219	WE 32 - d 14	32	14	35	60	44	811-106005
213-15220	WE 32 - d 16	32	16	40	60	48	811-106006
213-15221	WE 32 - d 18	32	18	40	60	50	811-106006
213-15222	WE 32 - d 20	32	20	40	60	52	811-106007
213-15223	WE 32 - d 25	32	25	65	60	65	811-106008

STRAIGHT SHANK TAPPING CILINDRIC CHUCKS - TENSION/COMPRESSION

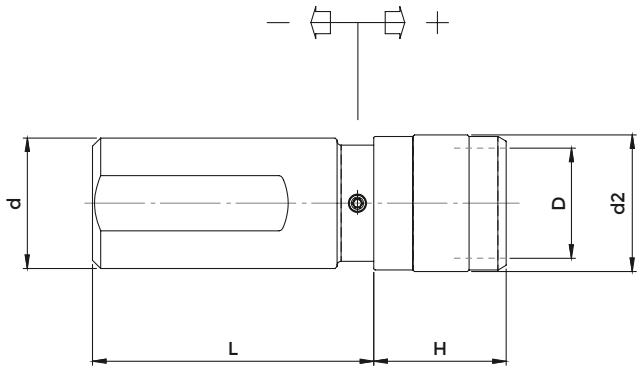

DIN 1835 A

COD.	DESCRIPTION	d	H	L	d2	D	RANGE	TAP SIZE RANGE
3807	d 16 - B. 0	16	37	56	26	13	- 6,5 + 6,5	M 1 ÷ M 10
3808	d 16 - B. 1	16	39	56	36	19	-7,5 + 7,5	M 3 ÷ M 12 (M 18)
3809	d 20 - B. 0	20	37	56	26	13	- 6,5 + 6,5	M 1 ÷ M 10
3851	d 20 - B. 1	20	40	50	38	19	-7,5 + 7,5	M 3 ÷ M 12 (M 18)
3852	d 20 - B. 2	20	63	50	53	31	-12,5 + 12,5	M 6 ÷ M 20 (M 30)
4451	d 25 - B. 1	25	40	53	38	19	-7,5 + 7,5	M 3 ÷ M 12 (M 18)
4452	d 25 - B. 2	25	63	53	53	31	-12,5 + 12,5	M 6 ÷ M 20 (M 30)
4453	d 32 - B. 1	32	40	60	38	19	-7,5 + 7,5	M 3 ÷ M 12 (+ M 18)
4454	d 32 - B. 2	32	63	77	53	31	-12,5 + 12,5	M 6 ÷ M 20 (M 30)
4486	d 32 - B. 3	32	98	100	79	48	-20,0 + 20,0	M 14 ÷ M 33 (M 48)
4455	d 40 - B. 1	40	40	58	38	19	-7,5 + 7,5	M 3 ÷ M 12 (M 18)
4456	d 40 - B. 2	40	63	77	53	31	-12,5 + 12,5	M 6 ÷ M 20 (M 30)
4487	d 40 - B. 3	40	98	100	79	48	-20,0 + 20,0	M 14 ÷ M 33 (M 48)

*Adapters with SCREWS

BORING BAR SLEEVE

Tapping adapters
from p. 656

Tapping adapteras
with ER collet p. 657

Threading die
adapters p. 658

WELDON STRAIGHT SHANK TAPPING CHUCKS - TENSION/COMPRESSION

Tapping adapters
from p. 656

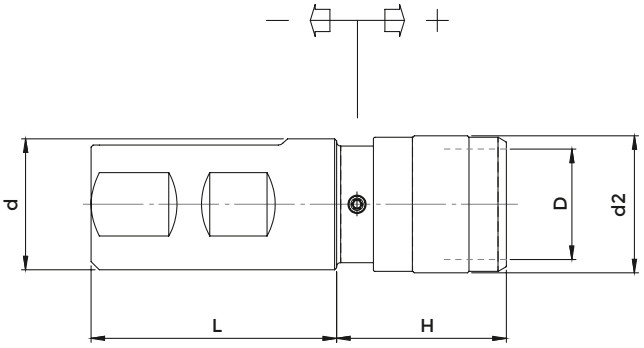

DIN 1835 B+E

COD.	DESCRIPTION	d	H	L	d2	D	RANGE	TAP SIZE RANGE
3127	WE 20 - B. 0	20	37	50	26	13	- 6,5 + 6,5	M 1 ÷ M 10
M401020	WE 20 - B. 1	20	40	50	38	19	-7,5 + 7,5	M 3 ÷ M 12 (* M 18)
3179	WE 20 - B. 2	20	63	50	53	31	-12,5 + 12,5	M 6 ÷ M 20 (* M 30)
M401025	WE 25 - B. 1	25	40	53	38	19	-7,5 + 7,5	M 3 ÷ M 12 (* M 18)
M402025	WE 25 - B. 2	25	63	53	53	31	-12,5 + 12,5	M 6 ÷ M 20 (* M 30)
M401032	WE 32 - B. 1	32	40	60	38	19	-7,5 + 7,5	M 3 ÷ M 12 (* M 18)
M402032	WE 32 - B. 2	32	63	60	53	31	-12,5 + 12,5	M 6 ÷ M 20 (* M 30)
M403032	WE 32 - B. 3	32	120	60	79	48	-20,0 + 20,0	M 14 ÷ M 33 (* M 48)
M401040	WE 40 - B. 1	40	40	72	38	19	-7,5 + 7,5	M 3 ÷ M 12 (* M 18)
M402040	WE 40 - B. 2	40	63	72	55	31	-12,5 + 12,5	M 6 ÷ M 20 (* M 30)
M403040	WE 40 - B. 3	40	98	72	79	48	-20,0 + 20,0	M 14 ÷ M 33 (* M 48)

*Adapters with SCREWS

WELDON STRAIGHT SHANK TAPPING CHUCKS - WITHOUT TENSION/COMPRESSION

Tapping adapters
from p. 656

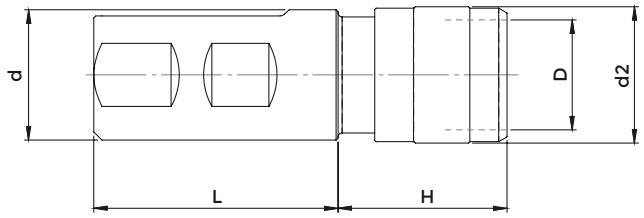

DIN 1835 B+E

COD.	DESCRIPTION	d	H	L	d2	D	TAP SIZE RANGE
2059	WE 20 - B. 1 FISSO	20	40	50	33	19	M 3 ÷ M 12 (* M 18)
2060	WE 20 - B. 2 FISSO	20	60	50	50	31	M 6 ÷ M 20 (* M 30)
2061	WE 25 - B. 1 FISSO	25	40	56	33	19	M 3 ÷ M 12 (* M 18)
2062	WE 25 - B. 2 FISSO	25	60	56	50	31	M 6 ÷ M 20 (* M 30)
2067	WE 32 - B. 1 FISSO	32	40	60	33	19	M 3 ÷ M 12 (* M 18)
2068	WE 32 - B. 2 FISSO	32	60	60	50	31	M 6 ÷ M 20 (* M 30)
2080	WE 40 - B. 1 FISSO	40	40	72	33	19	M 3 ÷ M 12 (* M 18)
2081	WE 40 - B. 2 FISSO	40	60	72	50	31	M 6 ÷ M 20 (* M 30)

*Adapters with SCREWS

DIN 1835 B SHANKS FOR MILLING CUTTERS WITH THREADED SHANK

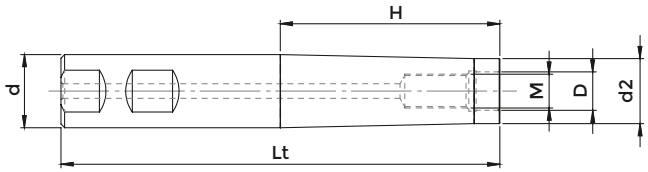

DIN 1835 B

COD.	DESCRIPTION	d	M	D	d2	H	Lt
217-85201	WE 16 - M 8	16	M8	8,5	12,8	60	115
217-85202	WE 16 - M 8	16	M8	8,5	12,8	100	160
217-85203	WE 20 - M 10	20	M10	10,5	17,8	60	120
217-85204	WE 20 - M 10	20	M10	10,5	17,8	100	160
217-85205	WE 25 - M 12	25	M12	12,5	20,8	100	160
217-85206	WE 32 - M 16	32	M16	17	28,8	100	160

EXTENSIONS FOR MILLING CUTTERS WITH THREADED SHANK

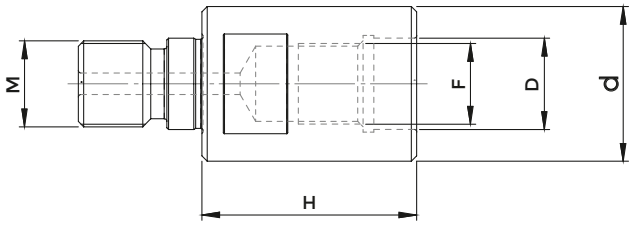

COD.	DESCRIPTION	M	F	D	d	H
217-85709	M 8 - M 8	M8	M8	8,5	12,8	30
217-85710	M 10 - M 10	M10	M10	10,5	17,8	35
217-85711	M 12 - M 12	M12	M12	12,5	20,8	40
217-85712	M 16 - M 16	M16	M16	17	28,8	40

REDUCTIONS FOR MILLING CUTTERS WITH THREADED SHANK

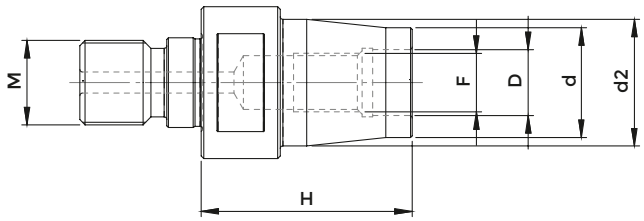

COD.	DESCRIPTION	M	F	D	d	d2	H
217-85713	M 10 - M 8	M10	M8	8,5	12,8	17,8	30
217-85714	M 12 - M 8	M12	M8	8,5	12,8	20,8	40
217-85715	M 12 - M 10	M12	M10	10,5	17,8	20,8	35
217-85716	M 16 - M 10	M16	M10	10,5	17,8	28,8	60
217-85717	M 16 - M 12	M16	M12	12,5	20,8	28,8	40

ER COLLET CHUCKS WITH THREADED SHANK

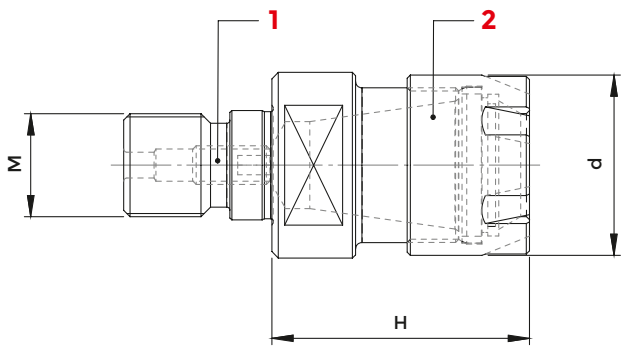

COD.	DESCRIPTION	M	ER	d	H	2 NUT	1 SCREW	WRENCH	COLLET
6460	M 12 - ER 16 GM	M12	ER 16 1÷12	22	35	1229	811-102020	816-203009	ER16
6461	M 16 - ER 16 GM	M16	ER 16 1÷12	22	40	1229	811-102020	816-203009	ER16
6462	M 16 - ER 20 GM	M16	ER 20 1÷15	28	40	1230	811-102020	816-203010	ER20
6463	M 16 - ER 25 GM	M16	ER 25 1÷20	35	45	1231	811-102020	816-203011	ER25

TRAPEZOIDAL SHANK ER COLLET CHUCKS WITH MINI NUT

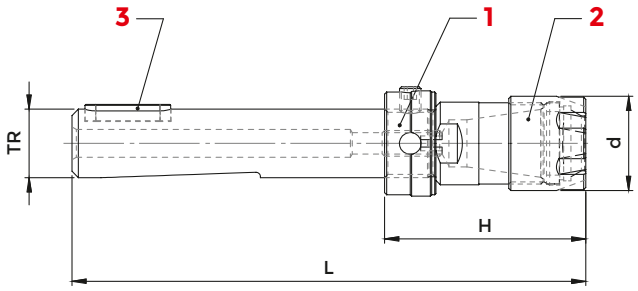

DIN 6327

COD.	DESCRIPTION	TR	ER	L	H	d	1 ADJUSTMENT NUT	3 KEY	2 NUT	WRENCH	COLLET
* 3146	TR 8 - ER 8 GM	8x1	ER 8 1÷ 5	75	35	12	2964	0101	0373	5717	0554
3147	TR10 - ER 11 GM	10x1,5	ER 11 1÷ 8	95	45	16	2965	0103	0432	5718	5573
3148	TR12 - ER 11 GM	12x1,5	ER 11 1÷ 8	95	45	16	2966	0103	0432	5718	5573
3149	TR12 - ER 16 GM	12x1,5	ER 16 1÷12	103	53	22	2966	0103	1229	5719	0364
3150	TR16 - ER 16 GM	16x1,5	ER 16 1÷12	120	47	22	2967	0107	1229	5719	0364
3151	TR16 - ER 20 GM	16x2	ER 20 1÷15	130	57	28	2967	0107	1230	5720	0787
3153	TR20 - ER 16 GM	20x2	ER 16 1÷12	135	59	22	2968	0107	1229	5719	0364
3154	TR20 - ER 20 GM	20x2	ER 20 1÷15	135	59	28	2968	0107	1230	5720	0787
3155	TR20 - ER 25 GM	20x2	ER 25 1÷20	135	59	35	2968	0107	1231	5721	0996

Supplied complete with adjustment nut
*Woodruff Key

ACCESSORIES

p. 634

p. 617

p. 637

TRAPEZOIDAL SHANK ER COLLET CHUCKS WITH EXAGONAL NUT

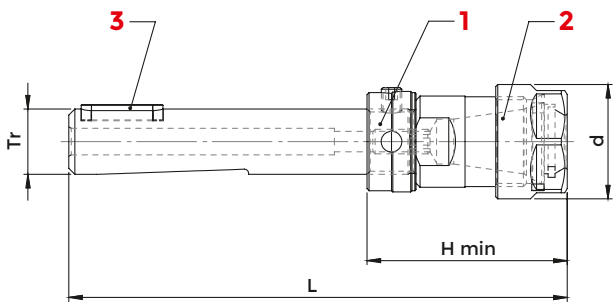

DIN 6327

COD.	DESCRIPTION	TR	ER	L	H MIN	d	1 ADJUSTMENT NUT	3 KEY	2 NUT	WRENCH	COLLET
3137	TR 16 - ER11 GE	16x1,5	ER 11 1÷ 8	110	37	19	2967	0107	1157	2905	5573
3138	TR 16 - ER16 GE	16x1,5	ER 16 1÷12	122	49	28	2967	0107	1214	2906	0364
3139	TR 20 - ER16 GE	20x2	ER 16 1÷12	128	52	28	2968	0107	1214	2906	0364
3140	TR 20 - ER20 GE	20x2	ER 20 1÷15	135	59	34	2968	0107	1215	2907	0787
3141	TR 28 - ER20 GE	28x2	ER 20 1÷15	140	57	34	2969	0108	1215	2907	0787

Supplied complete with adjustment nut

ACCESSORIES

p. 635

p. 617

p. 638

TRAPEZOIDAL SHANK ER COLLET CHUCKS WITH STANDARD NUT

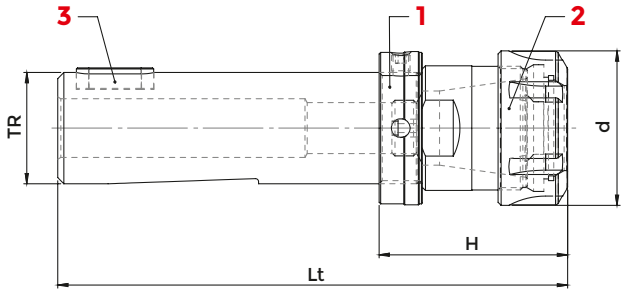

DIN 6327

COD.	DESCRIPTION	TR	ER	L	H	d	1 ADJUSTMENT NUT	3 KEY	2 NUT	WRENCH	COLLET
3142	TR 28 - ER 25	28x2	ER 25 1÷20	140	57	42	2969	108	4995	3669	0996
3143	TR 28 - ER 32	28x2	ER 32 2÷25	147	64	50	2969	108	4996	3670	0988
3162	TR 28 - ER 40	28x2	ER 40 3÷32	190	107	63	2969	108	4997	3671	0821
3973	TR 36 - ER 25	36x2	ER 25 1÷20	163	57	42	2970	111	4995	3669	0996
3144	TR 36 - ER 32	36x2	ER 32 2÷25	165	61	50	2970	111	4996	3670	0988
3145	TR 36 - ER 40	36x2	ER 40 3÷32	186	82	63	2970	111	4997	3671	0821
3667	TR 48 - ER 32	48x2	ER 32 2÷25	200	74	50	2971	114	4996	3670	0988

Supplied complete with adjustment nut

ACCESSORIES

p. 635

p. 617

p. 638

DIN 6327 ADJUSTMENT NUTS

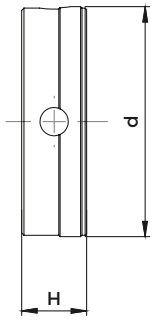

DIN 6327

COD.	DESCRIPTION	TR	H	d	SCREW
2964	GH - TR 8 x 1	8x1	10	14,8	0011
2965	GH - TR10 x1,5	10x1,5	12	17,8	0017
2966	GH - TR12 x1,5	12x1,5	12	19,7	0017
2967	GH - TR16 x1,5	16x1,5	12	24,6	0019
2968	GH - TR20 x 2	20x2	12	31,6	0019
2969	GH - TR28 x 2	28x2	12	39,6	0020
2970	GH - TR36 x 2	36x2	14	49,6	0020
2971	GH - TR48 x 2	48x2	18	66,6	0021

SHANKS FOR DRILL CHUCKS DIN 238 / ISO 239 TYPE

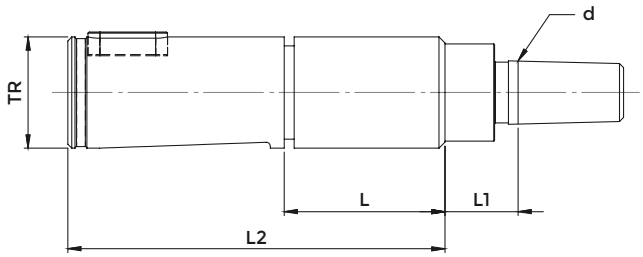

DIN 6327

COD.	DESCRIPTION	TR	L	L1	L2	d	ADJUSTMENT NUT
2774	TR 28 - B 16	28x2	42	21	95	15,733	2969
2775	TR 36 - B 16	36x2	50	21	118	15,733	2970

ACCESSORIES
p. 601

DIN 6327 ADJUSTABLE MORSE TAPER ADAPTERS - "E" TYPE

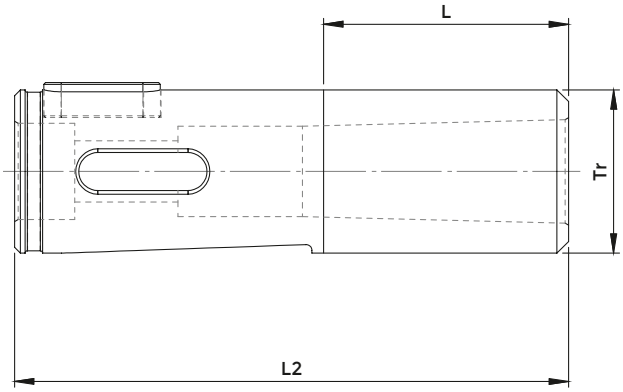

DIN 6327

COD.	DESCRIPTION	TR	L	L2	ADJUSTMENT NUT
2984	E 16 x 1	16	40	85	2967
2985	E 20 x 1	20	40	88	2968
2986	E 28 x 1	28	42	95	2969
3167	E 28 x 2	28	42	95	2969
3168	E 36 x 2	36	50	118	2970
3410	E 36 x 3	36	50	118	2970
3198	E 48 x 2	48	65	144	2971

ACCESSORIES

p. 587

TENSION/COMPRESSION QUICK CHANGE TAPPING HEADS

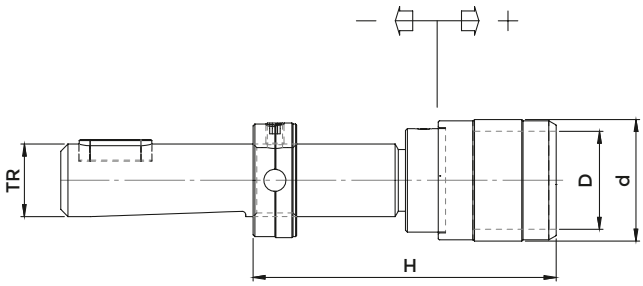

Tapping adapters
from p. 656

DIN 6327

COD.	DESCRIPTION	TR	H	d	D	RANGE	TAP SIZE RANGE
							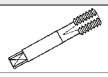
3811	TR 16 - B. 0	16x2	49	26	13	- 6,5 + 6,5	M 1 ÷ M 10
3564	TR 16 - B. 1	16x2	51	36	19	-7,5 + 7,5	M 3 ÷ M 12 (* M 18)
3156	TR 20 - B. 0	20x2	49	26	13	- 6,5 + 6,5	M 1 ÷ M 10
3565	TR 20 - B. 1	20x2	51	38	19	-7,5 + 7,5	M 3 ÷ M 12 (* M 18)
3926	TR 20 - B. 2	20x2	75	55	31	-12,5 + 12,5	M 6 ÷ M 20 (* M 30)
3566	TR 28 - B. 1	28x2	51	38	19	-7,5 + 7,5	M 3 ÷ M 12 (* M 18)
3567	TR 28 - B. 2	28x2	76	55	31	-12,5 + 12,5	M 6 ÷ M 20 (* M 30)
3220	TR 28 - B. 3	28x2	108	79	48	-20,0 + 20,0	M14 ÷ M 33 (* M 48)
3568	TR 36 - B. 1	36x2	53	38	19	-7,5 + 7,5	M 3 ÷ M 12 (* M 18)
3569	TR 36 - B. 2	36x2	78	55	31	-12,5 + 12,5	M 6 ÷ M 20 (* M 30)
3570	TR 36 - B. 3	36x2	110	79	48	-20,0 + 20,0	M14 ÷ M 33 (* M 48)
3571	TR 48 - B. 3	48x2	114	79	48	-20,0 + 20,0	M14 ÷ M 33 (* M 48)

*Adapters with SCREWS
Supplied complete with adjustment nut

SOLID TAPPING HEADS

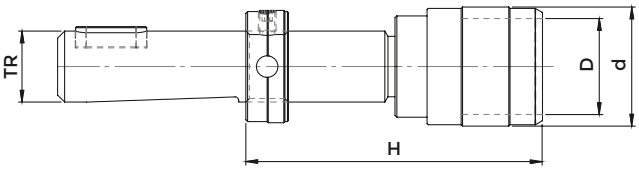

Tapping adapters
from p. 656

DIN 6327

COD.	DESCRIPTION	TR	H	d	D	TAP SIZE RANGE
						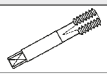
5198	TR 16 - B. 0 FISSO	16x2	45	23	13	M 1 ÷ M 10
5199	TR 16 - B. 1 FISSO	16x2	49	32	19	M 3 ÷ M 12 (* M 18)
5211	TR 20 - B. 1 FISSO	20x2	49	32	19	M 3 ÷ M 12 (* M 18)
5212	TR 20 - B. 2 FISSO	20x2	66	50	31	M 6 ÷ M 20 (* M 30)
5213	TR 28 - B. 1 FISSO	28x2	49	32	19	M 3 ÷ M 12 (* M 18)
5214	TR 28 - B. 2 FISSO	28x2	66	50	31	M 6 ÷ M 20 (* M 30)
5215	TR 36 - B. 1 FISSO	36x2	49	32	19	M 3 ÷ M 12 (* M 18)
5216	TR 36 - B. 2 FISSO	36x2	68	50	31	M 6 ÷ M 20 (* M 30)

Supplied complete with adjustment nut

ER COLLET CHUCKS WITH MINI NUT

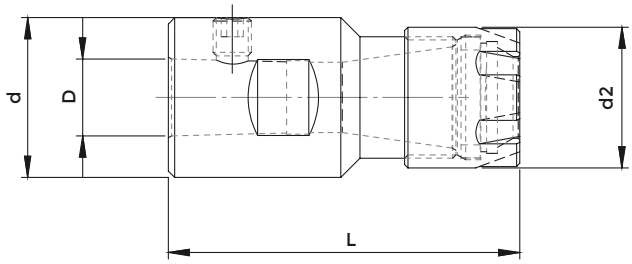

DIN 238

COD.	DESCRIPTION	d	ER	L	d2	d	NUT	WRENCH	COLLET
3193	"B12" - ER 11 GM	25	ER 11 1÷ 8	63	12,06	16	0432	5718	5573
3194	"B12" - ER 16 GM	25	ER 16 1÷12	55	12,06	22	1229	5719	0364
3221	"B12" - ER 20 GM	25	ER 20 1÷15	67	12,06	28	1230	5720	0787
3195	"B16" - ER 16 GM	25	ER 16 1÷12	85	15,73	22	1229	5719	0364
3196	"B16" - ER 20 GM	25	ER 20 1÷15	80	15,73	28	1230	5720	0787
3197	"B18" - ER 20 GM	28	ER 20 1÷15	74	17,78	28	1230	5720	0787

ACCESSORIES

p. 634

p. 617

p. 637

SOLID TAPPING HEADS

Tapping adapters
from p. 656

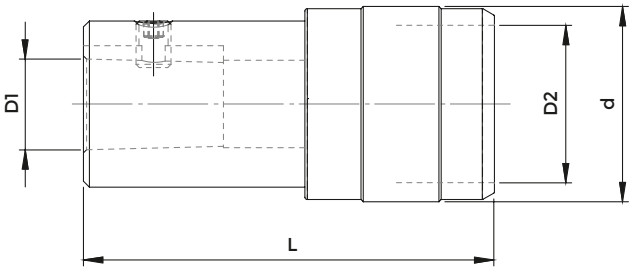

DIN 238

COD.	DESCRIPTION	L	D1	d	D2	TAP SIZE RANGE
0244	"B 12" - B. 0 FISSO	55	12,06	26	13	M 1 ÷ M 10
0320	"B 12" - B. 1 FISSO	59	12,06	33	19	M 3 ÷ M 12 (* M 18)
0340	"B 16" - B. 1 FISSO	65	15,73	33	19	M 3 ÷ M 12 (* M 18)
0071	"B 16" - B. 2 FISSO	84	15,73	50	31	M 6 ÷ M 20 (* M 30)
0384	"B 18" - B. 1 FISSO	73	17,78	33	19	M 3 ÷ M 12 (* M 18)
0072	"B 18" - B. 2 FISSO	92	17,78	50	31	M 6 ÷ M 20 (* M 30)

*Adapters with SCREWS

MORSE TAPER DIN 228-A
STANDARD FEATURES (WITH THREAD)

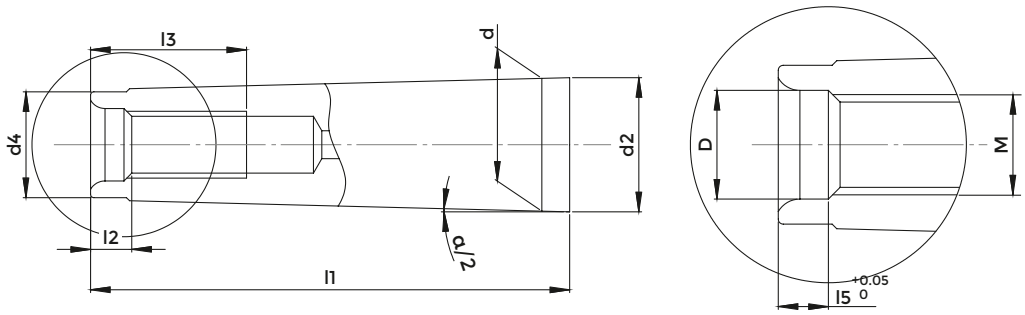

DIN 288-A

CONE	d	d2	d4	D	M	l1	l2	l3	l5	α/2
CM 0	9,045	9,2	6	-	-	50	4	-	-	1° 29' 27"
CM 1	12,065	12,2	9	6,4	M 6	53,5	5	16	4	1° 25' 43"
CM 2	17,78	18	14	10,5	M 10	64	5	24	5	1° 25' 50"
CM 3	23,825	24,1	19	13	M 12	81	7	24	5,5	1° 26' 16"
CM 4	31,267	31,6	25	17	M 16	102,5	9	32	8,2	1° 29' 15"
CM 5	44,399	44,7	35,7	21	M 20	129,5	10	40	10	1° 30' 26"
CM 6	63,348	63,8	51	25	M 24	182	16	47	11,5	1° 29' 36"

MORSE TAPER DIN 228-B
STANDARD FEATURES (WITH TENON)

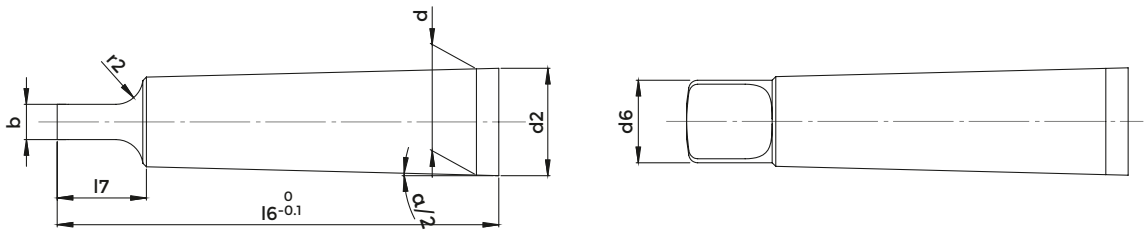

DIN 288-A

CONE	b	d	d2	d6	l6	l7	r2	α/2
CM 0	3,9	9,045	9,2	6	56,5	10,5	4	1° 29' 27"
CM 1	5,2	12,065	12,2	8,7	62	13,5	5	1° 25' 43"
CM 2	6,3	17,78	18	13,5	75	16	6	1° 25' 50"
CM 3	7,9	23,825	24,1	18,5	94	20	7	1° 26' 16"
CM 4	11,9	31,267	31,6	24,5	117,5	24	8	1° 29' 15"
CM 5	15,9	44,399	44,7	35,7	149,5	29	10	1° 30' 26"
CM 6	19	63,348	63,8	51	210	40	13	1° 29' 36"

MORSE TAPER SHANK ER COLLET CHUCKS WITH THREAD - MINI NUT

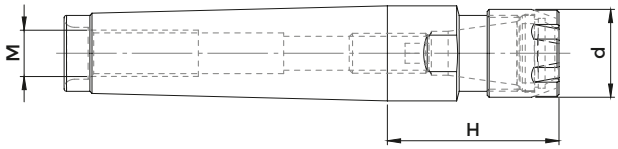

DIN 228-A

COD.	DESCRIPTION	CM	ER	H	d	M	NUT	WRENCH	COLLET
3509	CM 1 A - ER 11 GM	1	ER 11 1÷ 8	25	16	M 6	0432	5718	5573
3510	CM 1 A - ER 16 GM	1	ER 16 1÷ 12	40	22	M 6	1229	5719	0364
3511	CM 2 A - ER 16 GM	2	ER 16 1÷ 12	42	22	M 10	1229	5719	0364
3512	CM 2 A - ER 20 GM	2	ER 20 1÷ 15	50	28	M 10	1230	5720	0787
3513	CM 2 A - ER 25 GM	2	ER 25 1÷ 20	54	35	M 10	1231	5721	0996
3516	CM 3 A - ER 16 GM	3	ER 16 1÷ 12	43	22	M 12	1229	5719	0364
3517	CM 3 A - ER 20 GM	3	ER 20 1÷ 15	47	28	M 12	1230	5720	0787
3518	CM 3 A - ER 25 GM	3	ER 25 1÷ 20	58	35	M 12	1231	5721	0996

ACCESSORIES

p. 634

p. 617

p. 637

MORSE TAPER SHANK ER COLLET CHUCKS WITH TENON - MINI NUT

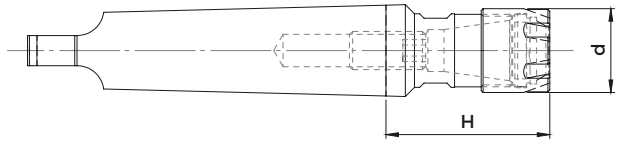

DIN 228-B

COD.	DESCRIPTION	CM	ER	H	d	NUT	WRENCH	COLLET
8613	CM 1 - ER 11 GM	1	ER 11 1÷ 8	25	16	0432	5718	5573
8614	CM 1 - ER 16 GM	1	ER 16 1÷12	40	22	1229	5719	0364
8615	CM 2 - ER 16 GM	2	ER 16 1÷12	42	22	1229	5719	0364
8616	CM 2 - ER 20 GM	2	ER 20 1÷15	50	28	1230	5720	0787
8617	CM 2 - ER 25 GM	2	ER 25 1÷20	54	35	1231	5721	0996
8618	CM 3 - ER 16 GM	3	ER 16 1÷12	43	22	1229	5719	0364
8619	CM 3 - ER 20 GM	3	ER 20 1÷15	47	28	1230	5720	0787
8620	CM 3 - ER 25 GM	3	ER 25 1÷20	58	35	1231	5721	0996

ACCESSORIES

p. 634

p. 617

p. 637

MORSE TAPER SHANK ER COLLET CHUCKS WITH THREAD - HEXAGONAL NUT

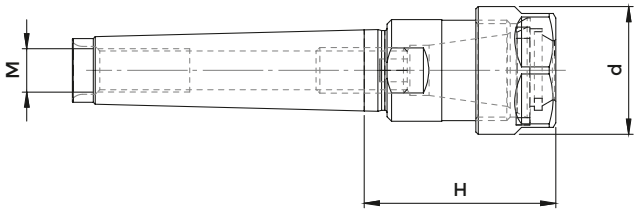

DIN 228-A

COD.	DESCRIPTION	CM	ER	H	d	M	NUT	WRENCH	COLLET
8621	CM 1 A - ER 16 GE	1	ER 16 1÷ 12	40	28	M 6	1214	2906	0364
8622	CM 2 A - ER 16 GE	2	ER 16 1÷ 12	42	28	M 10	1214	2906	0364
8623	CM 2 A - ER 20 GE	2	ER 20 1÷ 15	50	34	M 10	1215	2907	0787

ACCESSORIES

p. 635

p. 617

p. 638

MORSE TAPER SHANK ER COLLET CHUCKS WITH TENON - HEXAGONAL NUT

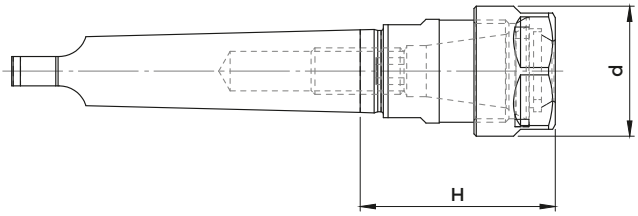

DIN 228-B

COD.	DESCRIPTION	CM	ER	H	d	NUT	WRENCH	COLLET
8624	CM 1 - ER 16 GE	1	ER 16 1÷12	40	28	1214	2906	0364
8625	CM 2 - ER 16 GE	2	ER 16 1÷12	42	28	1214	2906	0364
8626	CM 2 - ER 20 GE	2	ER 20 1÷15	50	34	1215	2907	0787

ACCESSORIES

p. 635

p. 617

p. 638

MORSE TAPER SHANK ER COLLET CHUCKS WITH THREAD - STANDARD NUT

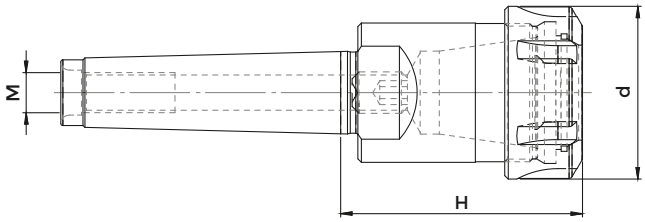

DIN 238-A

COD.	DESCRIPTION	CM	ER	H	d	M	NUT	WRENCH	COLLET
2915	CM 1 A - ER 16	1	ER 16 1÷12	40	32	M 6	4993	3698	0364
2916	CM 2 A - ER 16	2	ER 16 1÷12	42	32	M 10	4993	3698	0364
2917	CM 2 A - ER 20	2	ER 20 1÷15	50	35	M 10	4994	3699	0787
2918	CM 2 A - ER 25	2	ER 25 1÷20	54	42	M 10	4995	3669	0996
3310	CM 2 A - ER 32	2	ER 32 2÷25	59	50	M 10	4996	3670	0988
2919	CM 3 A - ER 25	3	ER 25 1÷20	53	42	M 12	4995	3669	0996
2920	CM 3 A - ER 32	3	ER 32 2÷25	70	50	M 12	4996	3670	0988
2921	CM 3 A - ER 40	3	ER 40 3÷32	80	63	M 12	4997	3671	0821
2922	CM 4 A - ER 32	4	ER 32 2÷25	60	50	M 16	4996	3670	0988
2923	CM 4 A - ER 40	4	ER 40 3÷32	81	63	M 16	4997	3671	0821
2924	CM 4 A - ER 50	4	ER 50 6÷36	96	78	M 16	4998	3668	4055
2902	CM 5 A - ER 32	5	ER 32 2÷25	50	50	M 20	4996	3670	0988
2925	CM 5 A - ER 40	5	ER 40 3÷32	81	63	M 20	4997	3671	0821
2926	CM 5 A - ER 50	5	ER 50 6÷36	91	78	M 20	4998	3668	4055

ACCESSORIES
p. 635

p. 617

p. 638

EQUIPMENT CASES WITH REDUCED SET OF ER COLLETS

COD.	DESCRIPTION	CM	CHUCK	CASE	WRENCH	COLLET
7524	KIT Rid CM 2 A - ER 25	2	2918	7022	3669	0996: Ø 4 - 6 - 8 -10 -12 -16
7525	KIT Rid CM 2 A - ER 32	2	3310	7023	3670	0988: Ø 4 - 6 - 8 -10 -12 -16 - 20
7526	KIT Rid CM 3 A - ER 25	3	2919	7022	3669	0996: Ø 4 - 6 - 8 -10 -12 -16
7527	KIT Rid CM 3 A - ER 32	3	2920	7023	3670	0988: Ø 4 - 6 - 8 -10 -12 -16 - 20
7528	KIT Rid CM 3 A - ER 40	3	2921	7024	3671	0821: Ø 4 - 6 - 8 -10 -12 -16 - 20 -25
7529	KIT Rid CM 4 A - ER 32	4	2922	7023	3670	0988: Ø 4 - 6 - 8 -10 -12 -16 - 20
7530	KIT Rid CM 4 A - ER 40	4	2923	7024	3671	0821: Ø 4 - 6 - 8 -10 -12 -16 - 20 -25

EQUIPMENT CASES WITH COMPLETE SET OF ER COLLETS

COD.	DESCRIPTION	CM	CHUCK	CASE	WRENCH	COLLET
7508	KIT CM 2 A - ER 25	2	2918	7022	3669	0996: Ø 2 ÷ 16 (15 Pinze)
7509	KIT CM 2 A - ER 32	2	3310	7023	3670	0988: Ø 3 ÷ 20 (18 Pinze)
7510	KIT CM 3 A - ER 25	3	2919	7022	3669	0996: Ø 2 ÷ 16 (15 Pinze)
7511	KIT CM 3 A - ER 32	3	2920	7023	3670	0988: Ø 3 ÷ 20 (18 Pinze)
7512	KIT CM 3 A - ER 40	3	2921	7024	3671	0821: Ø 4 ÷ 26 (23 Pinze)
7513	KIT CM 4 A - ER 32	4	2922	7023	3670	0988: Ø 3 ÷ 20 (18 Pinze)
7514	KIT CM 4 A - ER 40	4	2923	7024	3671	0821: Ø 4 ÷ 26 (23 Pinze)

MORSE TAPER SHANK ER COLLET CHUCKS WITH TENON - STANDARD NUT

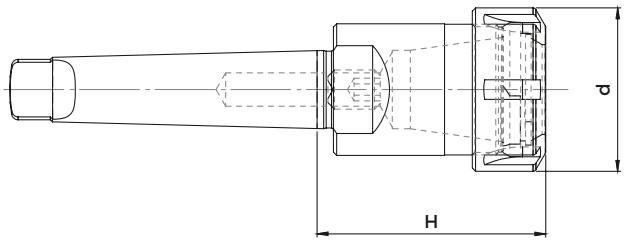

DIN 228-B

COD.	DESCRIPTION	CM	ER	H	d	NUT	SCREW	WRENCH	COLLET
8627	CM 1 - ER 16	1	ER 16 1÷12	40	32	4993	0181	3698	0364
8628	CM 2 - ER 16	2	ER 16 1÷12	42	32	4993	0186	3698	0364
8629	CM 2 - ER 20	2	ER 20 1÷15	50	35	4994	0186	3699	0787
8630	CM 2 - ER 25	2	ER 25 1÷20	54	42	4995	0186	3669	0996
8631	CM 2 - ER 32	2	ER 32 2÷25	59	50	4996	0186	3670	0988
8632	CM 3 - ER 25	3	ER 25 1÷20	53	42	4995	4973	3669	0996
8633	CM 3 - ER 32	3	ER 32 2÷25	70	50	4996	4973	3670	0988
8634	CM 3 - ER 40	3	ER 40 3÷32	80	63	4997	4973	3671	0821
8635	CM 4 - ER 32	4	ER 32 2÷25	60	50	4996	0190	3670	0988
8636	CM 4 - ER 40	4	ER 40 3÷32	81	63	4997	0190	3671	0821
8637	CM 4 - ER 50	4	ER 50 6÷36	96	78	4998	0190	3668	4055
8638	CM 5 - ER 32	5	ER 32 2÷25	50	50	4996	0191	3670	0988
8639	CM 5 - ER 40	5	ER 40 3÷32	81	63	4997	0195	3671	0821
8640	CM 5 - ER 50	5	ER 50 6÷36	91	78	4998	0195	3668	4055

ACCESSORIES
p. 635

p. 617

p. 638

EQUIPMENT CASES WITH REDUCED SET OF ER COLLETS

COD.	DESCRIPTION	CM	CHUCK	CASE	WRENCH	COLLET
7727	KIT Rid CM 2 - ER 25	2	8630	7022	3669	0996: Ø 4 - 6 - 8 -10 -12 -16
7728	KIT Rid CM 2 - ER 32	2	8631	7023	3670	0988: Ø 4 - 6 - 8 -10 -12 -16 - 20
7729	KIT Rid CM 3 - ER 25	3	8632	7022	3669	0996: Ø 4 - 6 - 8 -10 -12 -16
7730	KIT Rid CM 3 - ER 32	3	8633	7023	3670	0988: Ø 4 - 6 - 8 -10 -12 -16 - 20
7731	KIT Rid CM 3 - ER 40	3	8634	7024	3671	0821: Ø 4 - 6 - 8 -10 -12 -16 - 20 -25
7732	KIT Rid CM 4 - ER 32	4	8635	7023	3670	0988: Ø 4 - 6 - 8 -10 -12 -16 - 20
7733	KIT Rid CM 4 - ER 40	4	8636	7024	3671	0821: Ø 4 - 6 - 8 -10 -12 -16 - 20 -25

EQUIPMENT CASES WITH COMPLETE SET OF ER COLLETS

COD.	DESCRIPTION	CM	CHUCK	CASE	WRENCH	COLLET
7734	KIT CM 2 - ER 25	2	8630	7022	3669	0996: Ø 2 ÷ 16 (15 Pinze)
7735	KIT CM 2 - ER 32	2	8631	7023	3670	0988: Ø 3 ÷ 20 (18 Pinze)
7736	KIT CM 3 - ER 25	3	8632	7022	3669	0996: Ø 2 ÷ 16 (15 Pinze)
7737	KIT CM 3 - ER 32	3	8633	7023	3670	0988: Ø 3 ÷ 20 (18 Pinze)
7738	KIT CM 3 - ER 40	3	8634	7024	3671	0821: Ø 4 ÷ 26 (23 Pinze)
7739	KIT CM 4 - ER 32	4	8635	7023	3670	0988: Ø 3 ÷ 20 (18 Pinze)
7740	KIT CM 4 - ER 40	4	8636	7024	3671	0821: Ø 4 ÷ 26 (23 Pinze)

MORSE TAPER END MILL HOLDERS FOR DIN 1835-B SHANKS

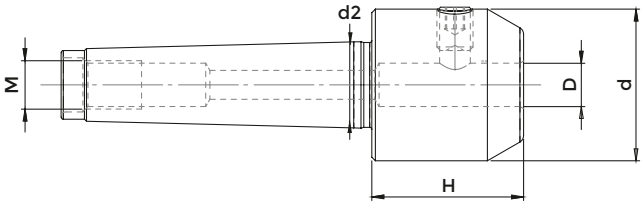

DIN 228-A

COD.	DESCRIPTION	D	H	d	d2	M
9535	CM 2 A - d 16	16	58	48	18,0	M 10
9545	CM 3 A - d 20	20	60	52	24,1	M 12
9546	CM 3 A - d 25	25	70	65	24,1	M 12
9552	CM 4 A - d 16	16	58	48	31,6	M 16
9554	CM 4 A - d 20	20	60	52	31,6	M 16
9555	CM 4 A - d 25	25	70	65	31,6	M 16
9556	CM 4 A - d 32	32	75	72	31,6	M 16
9557	CM 4 A - d 40	40	85	90	31,6	M 16

TENON FOR MORSE TAPER

DIN 228-A-B

COD.	DESCRIPTION	M
4079	T . CM 1 - M 6	M 6
4080	T . CM 2 - M 10	M 10
4081	T . CM 3 - M 12	M 12
4082	T . CM 4 - M 16	M 16
4083	T . CM 5 - M 20	M 20

MORSE TAPER SHANK DRILL CHUCKS - RIGHT SPIN

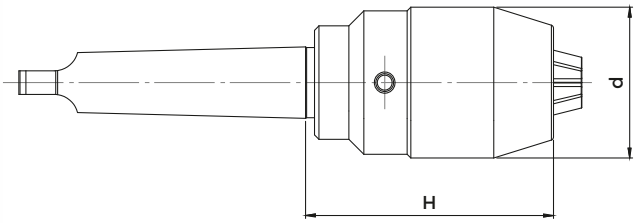

DIN 228-B

COD.	DESCRIPTION	CM	RANGE	d	H	WRENCH
8646	CM 2 - DC 13	2	0,5 ÷ 13	50	86	2370
8647	CM 3 - DC 13	3	0,5 ÷ 13	50	86	2370
8648	CM 3 - DC 16	3	3 ÷ 16	57	90	2371
8649	CM 4 - DC 13	4	0,5 ÷ 13	50	87	2370
8650	CM 4 - DC 16	4	3 ÷ 16	57	91	2371

Supplied complete with suitable wrench

MORSE TAPER SHANK DRILL CHUCKS - RIGHT & LEFT SPIN

DIN 238 shank keyless drill chucks you can find at p. 601

Morse taper shank adapters to DIN 238 you can find at p. 602

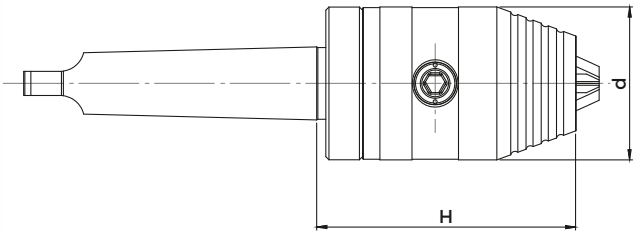

DIN 228-B

COD.	DESCRIPTION	CM	RANGE	d	H	WRENCH
8651	CM 2 - DCU 13	2	0,5 ÷ 13	50	87	2372
8652	CM 3 - DCU 13	3	0,5 ÷ 13	50	87	2372
8653	CM 3 - DCU 16	3	3 ÷ 16	50	92	2372
8654	CM 4 - DCU 13	4	0,5 ÷ 13	50	88	2372
8655	CM 4 - DCU 16	4	3 ÷ 16	50	94	2372

Supplied complete with suitable wrench

KEYLESS DRILL CHUCKS

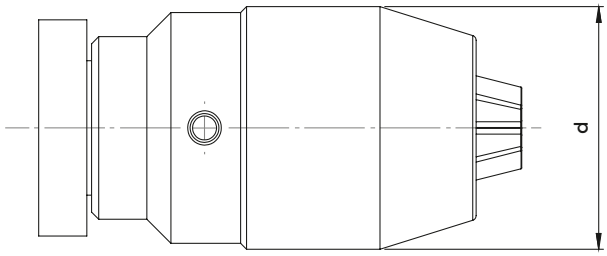

DIN 238

COD.	DESCRIPTION	d	RANGE	CLAMPS	SCREW	WRENCH
2800	B 10 - DC 6	33	0,5 ÷ 6,5	832-012014	9018	-
2801	B 10 - DC 8	38	0,5 ÷ 8	832-012015	9019	2368
2834	B 10 - DC 10	43	0,5 ÷ 10	832-012016	9020	2369
2802	B 12 - DC 8	38	0,5 ÷ 8	832-012015	9019	2368
2803	B 12 - DC 10	43	0,5 ÷ 10	832-012016	9020	2369
2804	B 12 - DC 13	50	0,5 ÷ 13	832-012017	9021	2370
2805	B 16 - DC 10	43	0,5 ÷ 10	832-012018	9022	2369
2806	B 16 - DC 13	50	0,5 ÷ 13	832-012017	9021	2370
2807	B 16 - DC 16	57	3 ÷ 16	832-012019	9023	2371
2808	B 18 - DC 16	57	3 ÷ 16	832-012019	9023	2371

Supplied complete with suitable wrench

HIGH PRECISION KEYLESS DRILL CHUCKS

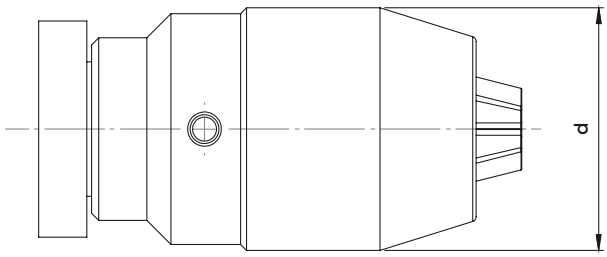

DIN 238

COD.	DESCRIPTION	d	RANGE	CLAMPS	SCREW	WRENCH
2853	B 10 - DC 8 Precision	38	0,5 ÷ 8	832-012015	9019	2368
2854	B 10 - DC 10 Precision	43	0,5 ÷ 10	832-012016	9020	2369
2810	B 12 - DC 8 Precision	38	0,5 ÷ 8	832-012015	9019	2368
2856	B 12 - DC 10 Precision	43	0,5 ÷ 10	832-012016	9020	2369
2858	B 12 - DC 13 Precision	50	0,5 ÷ 13	832-012020	9021	2370
2811	B 16 - DC 10 Precision	43	0,5 ÷ 10	832-012018	9022	2369
2812	B 16 - DC 13 Precision	50	0,5 ÷ 13	832-012020	9021	2370
2813	B 16 - DC 16 Precision	57	3 ÷ 16	832-012021	9023	2371
2818	B 18 - DC 16 Precision	57	3 ÷ 16	832-012021	9023	2371

Supplied complete with suitable wrench

MORSE TAPER ADAPTERS TO DIN 238 (ISO 239)

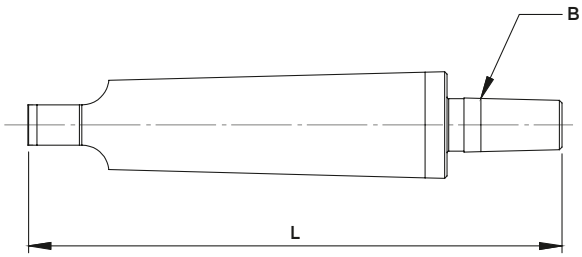

DIN 238-B

COD.	DESCRIPTION	CM	B	L
409601B10	CM 1 - B 10	1	10	83
409601B12	CM 1 - B 12	1	12	89
409601B16	CM 1 - B 16	1	16	99
409601B18	CM 1 - B 18	1	18	99
409602B10	CM 2 - B 10	2	10	105
409602B12	CM 2 - B 12	2	12	106
409602B16	CM 2 - B 16	2	16	112
409602B18	CM 2 - B 18	2	18	119
409602B22	CM 2 - B 22	2	22	130
409603B12	CM 3 - B 12	3	12	125
409603B16	CM 3 - B 16	3	16	134
409603B18	CM 3 - B 18	3	18	140
409603B22	CM 3 - B 22	3	22	147
409604B12	CM 4 - B 12	4	12	152
409604B16	CM 4 - B 16	4	16	156
409604B18	CM 4 - B 18	4	18	164
409604B22	CM 4 - B 22	4	22	176
409604B24	CM 4 - B 24	4	24	186
409605B16	CM 5 - B 16	5	16	190
409605B18	CM 5 - B 18	5	18	204
409605B22	CM 5 - B 22	5	22	213
409605B24	CM 5 - B 24	5	24	221

MORSE TAPER ADAPTERS WITH THREAD TO DIN 238 (ISO 239)

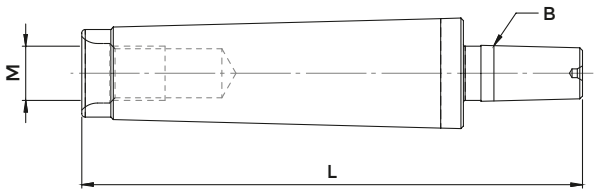

DIN 238-A

COD.	DESCRIPTION	CM	M	B	L
402402B10	CM 2 A - B 10	2	M 10	10	90
402402B12	CM 2 A - B 12	2	M 10	12	95
402402B16	CM 2 A - B 16	2	M 10	16	101
402403B16	CM 3 A - B 16	3	M 12	16	118
402404B16	CM 4 A - B 16	4	M 16	16	141

MORSE TAPER COLLETS FOR TWIST DRILLS

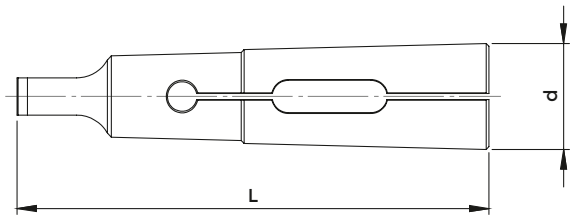

DIN 6329

COD.	DESCRIPTION	CM	RANGE	d	L	EINHEITS
5570 P	CM 0 - PUNTE	0	1 ÷ 5,5	9,2	59,5	510E
0640 P	CM 1 - PUNTE	1	1 ÷ 10,0	12,2	65,5	511E
0641 P	CM 2 - PUNTE	2	2,0 ÷ 15,0	18	80	514E
0642 P	CM 3 - PUNTE	3	8,0 ÷ 20,0	24,1	99	545E
0643 P	CM 4 - PUNTE	4	12,0 ÷ 25,0	31,6	124	548E
5571 P	CM 5 - PUNTE	5	32	44,7	156,2	599E

MORSE TAPER COLLETS FOR MILLING CUTTERS

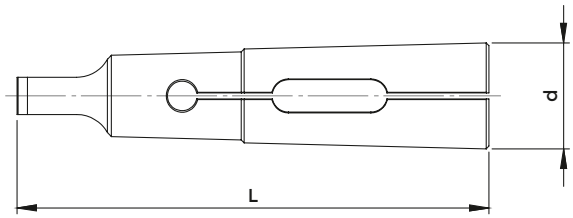

DIN 6328

COD.	DESCRIPTION	CM	RANGE	d	L	EINHEITS
5570 M	CM 0 - MASCHI	0	2,5 ÷ 4,5	9,2	59,5	500E
0640 M	CM 1 - MASCHI	1	2,5 ÷ 10,0	12,2	65,5	501E
0641 M	CM 2 - MASCHI	2	3,15 ÷ 14,0	18	80	504E
0642 M	CM 3 - MASCHI	3	6,0 ÷ 18,0	24,1	99	535E
0643 M	CM 4 - MASCHI	4	11,0 ÷ 25,0	31,6	124	538E
5571 M	CM 5 - MASCHI	5	20,0 ÷ 36,0	44,7	156,2	589E

THREADED MORSE TAPER COLLETS

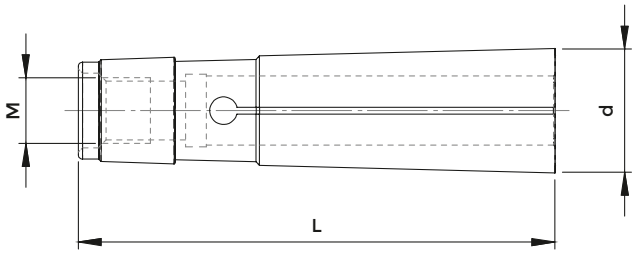

UNI 4702

COD.	DESCRIPTION	CM	RANGE	M	d	L	EINHEITS
0752	CM 2	2	1 ÷ 14	M 10	18	69	503E
0712	CM 3	3	2 ÷ 18	M 12	24,1	85,5	536E
0865	CM 4	4	4 ÷ 25	M 16	31,6	108,5	539E

MORSE TAPER FLOATING REAMER HOLDERS WITH ER COLLET

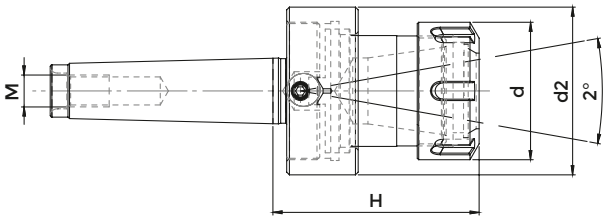

DIN 228-A

COD.	DESCRIPTION	CM	ER	d	d2	H	M	NUT	WRENCH	COLLET
3532	CM2 RM - ER 16	2	ER 16 1÷12	32	40	55	M 10	4993	3698	0364
3533	CM2 RM - ER 20	2	ER 20 1÷15	35	40	60	M 10	4994	3698	0787
3534	CM3 RM - ER 25	3	ER 25 1÷20	42	61	63	M 12	4995	3699	0996
3535	CM3 RM - ER 32	3	ER 32 2÷25	50	61	75	M 12	4996	3670	0988

ACCESSORIES

p. 635

p. 617

p. 638

MORSE TAPER SHELL REAMER HOLDERS WITH EJECTOR

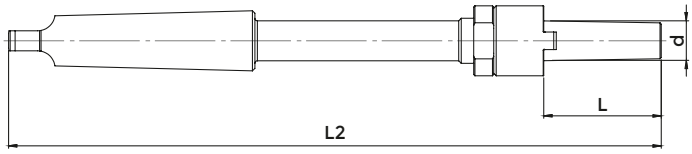

DIN 228-B

COD.	DESCRIPTION	CM	d	L	L2
1906	PA . CM 2 - D. 10	2	10	40	220
1907	PA . CM 3 - D. 13	3	13	45	250
1913	PA . CM 3 - D. 16	3	16	50	261
1914	PA . CM 3 - D. 19	3	19	56	270
1922	PA . CM 3 - D. 22	3	22	63	278
1925	PA . CM 4 - D. 19	4	19	56	298
1939	PA . CM 4 - D. 22	4	22	63	312
1944	PA . CM 4 - D. 27	4	27	71	325
1945	PA . CM 4 - D. 32	4	32	80	345
1946	PA . CM 5 - D. 27	5	27	71	359
1964	PA . CM 5 - D. 32	5	32	80	376
1966	PA . CM 5 - D. 40	5	40	90	396

MORSE TAPER BROACHING TOOLHOLDERS

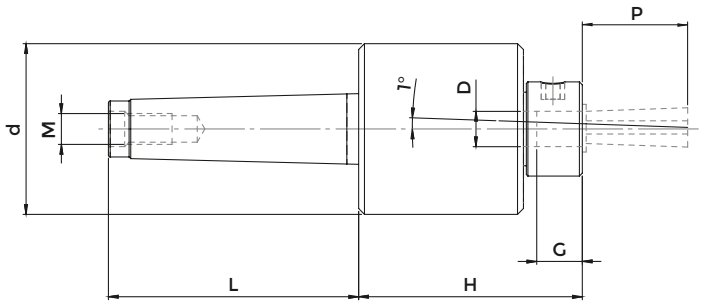

DIN 228-A

COD.	DESCRIPTION	CM	D	P	L	H	G	d	M
1668	P/UTENSILE a BROCCIARE - CM.2 / F. 8	2	8	**18**	69	38	10	32	M 10
1669	P/UTENSILE a BROCCIARE - CM.2 / F.12	2	12	**25**	69	46	16	44	M 10
1670	P/UTENSILE a BROCCIARE - CM.3 / F.16	3	16	**40**	85	76	21	58	M 12
1671	P/UTENSILE a BROCCIARE - CM.4 / F.16	4	16	**40**	109	76	21	58	M 16

For the right broaching toolholder working is important to respect broach **P** dimension. Informations from p. 553

BROACHES

p. 560

MORSE TAPER SHANK WITH THREAD DIN 6358 COMBI SHELL MILL HOLDERS

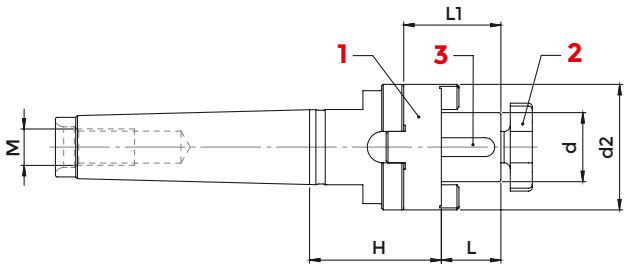

DIN 228-A

COD.	DESCRIPTION	CM	d	H	L1	L	d2	M	1 COUPLING	2 CROSS SCREW	3 KEY	WRENCH
4420	CM 2 A - D. 16 C	2	16	37	27	17	32	M 10	4090	4985	0115	4562
4421	CM 2 A - D. 22 C	2	22	42	31	19	40	M 10	4091	4986	0116	4563
4292	CM 3 A - D. 16 C	3	16	37	27	17	32	M 12	4090	4985	0115	4562
4293	CM 3 A - D. 22 C	3	22	42	31	19	40	M 12	4091	4986	0116	4563
4294	CM 3 A - D. 27 C	3	27	42	33	21	48	M 12	4092	4987	0122	4564
4295	CM 3 A - D. 32 C	3	32	63	38	24	58	M 12	4093	4988	0125	4565
4296	CM 4 A - D. 16 C	4	16	55	27	17	32	M 16	4090	4985	0115	4562
4297	CM 4 A - D. 22 C	4	22	55	31	19	40	M 16	4091	4986	0116	4563
4298	CM 4 A - D. 27 C	4	27	55	33	21	48	M 16	4092	4987	0122	4564
4299	CM 4 A - D. 32 C	4	32	55	38	24	58	M 16	4093	4988	0125	4565

ACCESSORIES

p. 677

p. 676

p. 677

MORSE TAPER SHANK WITH THREAD DIN 6358 COMBI SHELL MILL HOLDERS

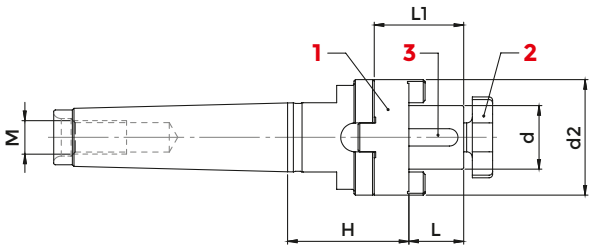

DIN 228-B

COD.	DESCRIPTION	CM	d	H	L1	L	d2	1 JOINT OF TRANSMISSION	2 CROSS SCREW	3 KEY	WRENCH
8656	CM 2 - D. 16 C	2	16	37	27	17	32	4090	4985	0115	4562
8657	CM 2 - D. 22 C	2	22	42	31	19	40	4091	4986	0116	4563
8659	CM 3 - D. 22 C	3	22	42	31	19	40	4091	4986	0116	4563
8660	CM 3 - D. 27 C	3	27	42	33	21	48	4092	4987	0122	4564
8661	CM 3 - D. 32 C	3	32	63	38	24	58	4093	4988	0125	4565
8662	CM 4 - D. 16 C	4	16	55	27	17	32	4090	4985	0115	4562
8663	CM 4 - D. 22 C	4	22	55	31	19	40	4091	4986	0116	4563
8664	CM 4 - D. 27 C	4	27	55	33	21	48	4092	4987	0122	4564
8665	CM 4 - D. 32 C	4	32	55	38	24	58	4093	4988	0125	4565

ACCESSORIES

p. 677

p. 676

p. 677

TENSION/COMPRESSION MORSE TAPER TAPPING HEADS WITH THREAD

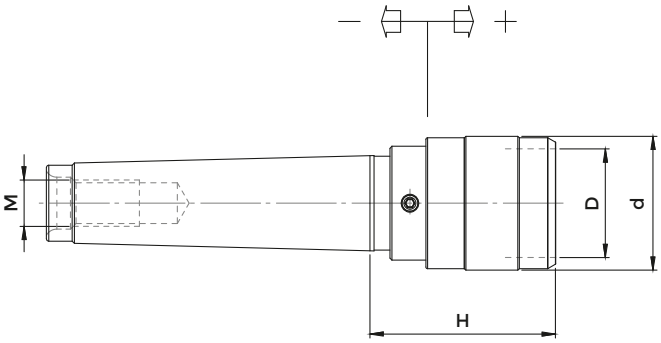

Tapping adapters
from p. 656

DIN 228-A

COD.	DESCRIPTION	CM	H	d	D	M	RANGE	TAP SIZE RANGE
4287	CM 2 A - B. 0	2	44	26	13	M 10	- 6,5 + 6,5	M 1 ÷ M 10
4286	CM 2 A - B. 1	2	46	38	19	M 10	-7,5 + 7,5	M 3 ÷ M 12 (* M 18)
4288	CM 3 A - B. 1	3	46	38	19	M 12	-7,5 + 7,5	M 3 ÷ M 12 (* M 18)
4289	CM 3 A - B. 2	3	70	55	31	M 12	-12,5 + 12,5	M 6 ÷ M 20 (* M 30)
4290	CM 4 A - B. 2	4	71	55	31	M 16	-12,5 + 12,5	M 6 ÷ M 20 (* M 30)
4291	CM 4 A - B. 3	4	104	79	48	M 16	-20,0 + 20,0	M 14 ÷ M 33 (* M 48)
4426	CM 5 A - B. 3	5	104	79	48	M 20	-20,0 + 20,0	M 14 ÷ M 33 (* M 48)

*Adapters with screw

TENSION/COMPRESSION MORSE TAPER TAPPING HEADS WITH TENON

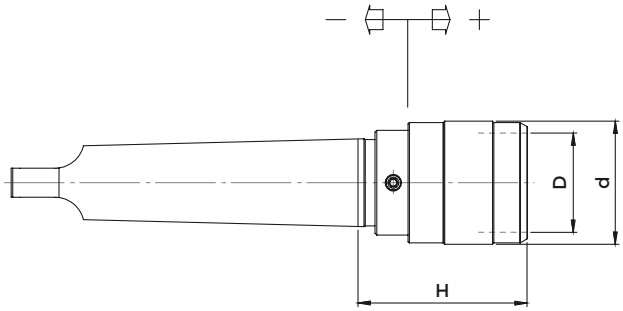

Tapping adapters
from p. 656

DIN 228-B

COD.	DESCRIPTION	CM	H	d	D	RANGE	TAP SIZE RANGE
4278	CM 2 - B. 0	2	44	26	13	- 6,5 + 6,5	M 1 ÷ M 10
3846	CM 2 - B. 1	2	46	38	19	-7,5 + 7,5	M 3 ÷ M 12 (* M 18)
3847	CM 3 - B. 1	3	46	38	19	-7,5 + 7,5	M 3 ÷ M 12 (* M 18)
3848	CM 3 - B. 2	3	69	55	31	-12,5 + 12,5	M 6 ÷ M 20 (* M 30)
3849	CM 4 - B. 2	4	70	55	31	-12,5 + 12,5	M 6 ÷ M 20 (* M 30)
3850	CM 4 - B. 3	4	104	79	48	-20,0 + 20,0	M 14 ÷ M 33 (* M 48)
4427	CM 5 - B. 3	5	104	79	48	-20,0 + 20,0	M 14 ÷ M 33 (* M 48

*Adapters with screw

MORSE TAPER SOLID TAPPING HEADS WITH THREAD

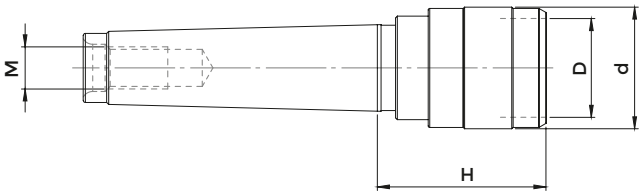

Tapping adapters
from p. 656

DIN 228-A

COD.	DESCRIPTION	CM	H	d	D	M	TAP SIZE RANGE
4696	CM 2 A FISSO - B. 1	2	44	33	19	M 10	M 3 ÷ M 12 (* M 18)
4697	CM 2 A FISSO - B. 2	2	61	50	31	M 10	M 6 ÷ M 20 (* M 30)
4698	CM 3 A FISSO - B. 1	3	44	33	19	M 12	M 3 ÷ M 12 (* M 18)
4699	CM 3 A FISSO - B. 2	3	61	50	31	M 12	M 6 ÷ M 20 (* M 30)

MORSE TAPER SOLID TAPPING HEADS WITH TENON

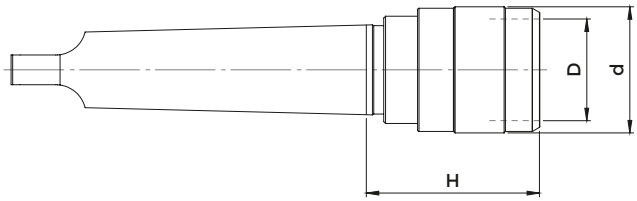

Tapping adapters
from p. 656

DIN 228-B

COD.	DESCRIPTION	CM	H	d	D	TAP SIZE RANGE
4279	CM 1 FISSO - B. 0	1	39	23	13	M 1 ÷ M 10
4282	CM 2 FISSO - B. 0	2	40	23	13	M 1 ÷ M 10
4283	CM 2 FISSO - B. 1	2	45	33	19	M 3 ÷ M 12 (* M 18)
4027	CM 2 FISSO - B. 2	2	61	50	31	M 6 ÷ M 20 (* M 30)
4284	CM 3 FISSO - B. 1	3	45	33	19	M 3 ÷ M 12 (* M 18)
4285	CM 3 FISSO - B. 2	3	61	50	31	M 6 ÷ M 20 (* M 30)
4340	CM 4 FISSO - B. 2	4	61	50	31	M 6 ÷ M 20 (* M 30)

MORSE TAPER OPEN-ENDED SLEEVES

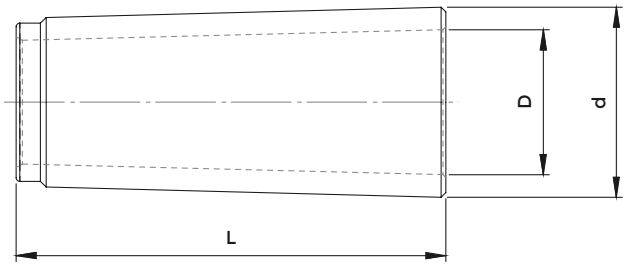

RCM.P

COD.	DESCRIPTION	EXTERNAL MT	INTERNAL MT	L	d	D
409700021	RCM. P/2 - 1	2	1	60	18	12
409700031	RCM. P/3 - 1	3	1	70	24,1	12
409700032	RCM. P/3 - 2	3	2	70	24,1	17,7
409700042	RCM. P/4 - 2	4	2	70	31,6	17,7
409700043	RCM. P/4 - 3	4	3	70	31,6	23,8
409700052	RCM. P/5 - 2	5	2	77	44,7	17,7
409700053	RCM. P/5 - 3	5	3	77	44,7	23,8
409700054	RCM. P/5 - 4	5	4	77	44,7	31,2
409700063	RCM. P/6 - 3	6	3	110	63,8	23,8
409700064	RCM. P/6 - 4	6	4	110	63,8	31,2
409700065	RCM. P/6 - 5	6	5	110	63,8	44,3

MORSE TAPER SLEEVES WITH RELEASE NUT

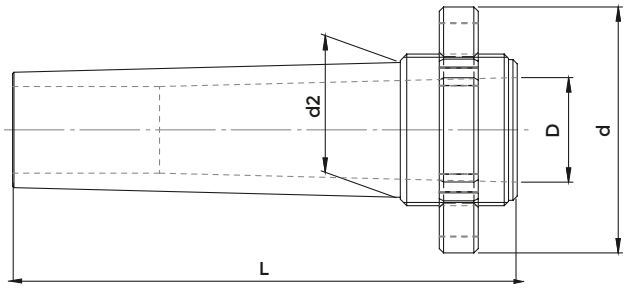

RCM.E

COD.	DESCRIPTION	EXTERNAL MT	INTERNAL MT	L	d	D	d2
404200021	RCM.E / 2 - 1	2	1	84	38	12,0	17,7
404200031	RCM.E / 3 - 1	3	1	102	48	12,0	23,8
404200032	RCM.E / 3 - 2	3	2	102	48	17,7	23,8
404200041	RCM.E / 4 - 1	4	1	122	57	12,00	31,2
404200042	RCM.E / 4 - 2	4	2	122	57	17,7	31,2
404200043	RCM.E / 4 - 3	4	3	122	57	23,8	31,2
404200052	RCM.E / 5 - 2	5	2	153	73	17,7	44,3
404200053	RCM.E / 5 - 3	5	3	153	73	23,8	44,3
404200054	RCM.E / 5 - 4	5	4	153	73	31,2	44,3
404200063	RCM.E / 6 - 3	6	3	212	98	23,8	63,3
404200064	RCM.E / 6 - 4	6	4	212	98	31,2	63,3
404200065	RCM.E / 6 - 5	6	5	212	98	44,3	63,3

MORSE TAPER ADAPTERS

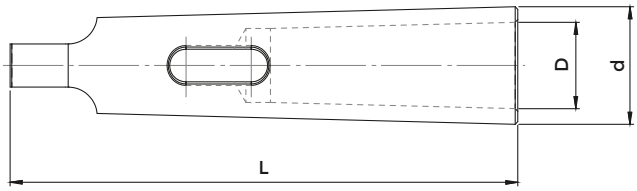

RCM.C - DIN 2185

COD.	DESCRIPTION	EXTERNAL MT	INTERNAL MT	L	d	D
409800010	RCM.C/ 1 - 0	1	0	80	12,2	9,045
409800021	RCM.C/ 2 - 1	2	1	92	18	12,065
409800031	RCM.C/ 3 - 1	3	1	99	24,1	12,065
409800032	RCM.C/ 3 - 2	3	2	112	24,1	17,78
409800041	RCM.C/ 4 - 1	4	1	124	31,6	12,065
409800042	RCM.C/ 4 - 2	4	2	124	31,6	17,78
409800043	RCM.C/ 4 - 3	4	3	140	31,6	23,825
409800051	RCM.C/ 5 - 1	5	1	156	44,7	12,065
409800052	RCM.C/ 5 - 2	5	2	156	44,7	17,78
409800053	RCM.C/ 5 - 3	5	3	156	44,7	23,825
409800054	RCM.C/ 5 - 4	5	4	171	44,7	31,267
409800062	RCM.C/ 6 - 2	6	2	218	63,8	17,78
409800063	RCM.C/ 6 - 3	6	3	218	63,8	23,825
409800064	RCM.C/ 6 - 4	6	4	218	63,8	31,267
409800065	RCM.C/ 6 - 5	6	5	218	63,8	44,399

EXTENDED MORSE TAPER ADAPTERS

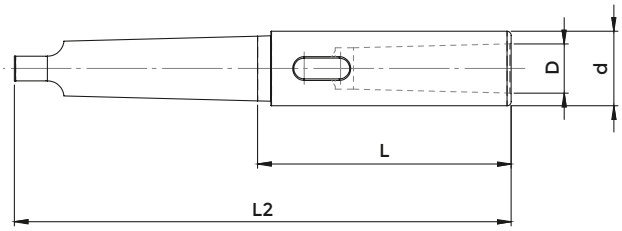

RCM.L - DIN 2187

COD.	DESCRIPTION	EXTERNAL MT	INTERNAL MT	L	L2	d	D
409900011	RCM.L / 1 - 1	1	1	83	145	20	12,065
409900012	RCM.L / 1 - 2	1	2	98	160	30	17,78
409900021	RCM.L / 2 - 1	2	1	85	160	20	12,065
409900022	RCM.L / 2 - 2	2	2	100	175	30	17,78
409900023	RCM.L/ 2 - 3	2	3	121	196	36	23,825
409900024	RCM.L/ 2 - 4	2	4	145	220	48	31,267
409900031	RCM.L / 3 - 1	3	1	81	175	20	12,065
409900032	RCM.L / 3 - 2	3	2	100	194	30	17,78
409900033	RCM.L / 3 - 3	3	3	112	215	36	23,825
409900034	RCM.L / 3 - 4	3	4	146	240	48	31,267
409900041	RCM.L / 4 - 1	4	1	82,5	200	20	12,065
409900042	RCM.L / 4 - 2	4	2	97,5	215	30	17,78
409900043	RCM.L / 4 - 3	4	3	122,5	240	36	23,825
409900044	RCM.L / 4 - 4	4	4	147,5	265	48	31,267
409900045	RCM.L / 4 - 5	4	5	182,5	300	63	44,399
409900051	RCM.L / 5 - 1	5	1	82,5	232	20	12,065
409900052	RCM.L / 5 - 2	5	2	97,5	247	30	17,78
409900053	RCM.L / 5 - 3	5	3	118,5	268	36	23,825
409900054	RCM.L / 5 - 4	5	4	150,5	300	48	31,267
409900055	RCM.L / 5 - 5	5	5	185,5	335	63	44,399
409900056	RCM.L / 5 - 6	5	6	247	396	82	63,348
409900063	RCM.L / 6 - 3	6	3	120	330	36	23,825
409900064	RCM.L / 6 - 4	6	4	180	355	48	31,267
409900065	RCM.L / 6 - 5	6	5	180	390	63	44,399
409900066	RCM.L / 6 - 6	6	6	241	451	82	63,348

EXTRA-LONG MORSE TAPER EXTENSIONS

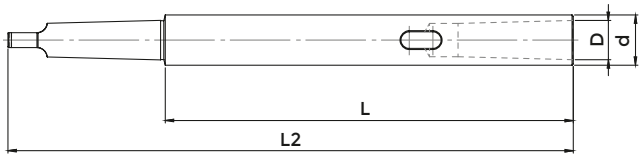

RXL

COD.	DESCRIPTION	EXTERNAL MT	INTERNAL MT	L	L2	d	D
8800	RXL 1 - 1 / 200	1	1	138	200	20	12,065
8801	RXL 1 - 1 / 250	1	1	188	250	20	12,065
8802	RXL 1 - 1 / 300	1	1	238	300	20	12,065
8803	RXL 1 - 1 / 350	1	1	288	350	20	12,065
8804	RXL 1 - 1 / 400	1	1	338	400	20	12,065
8805	RXL 1 - 1 / 450	1	1	388	450	20	12,065
8806	RXL 1 - 1 / 500	1	1	438	500	20	12,065
8807	RXL 2 - 2 / 200	2	2	125	200	25	17,78
8808	RXL 2 - 2 / 250	2	2	175	250	25	17,78
8809	RXL 2 - 2 / 300	2	2	225	300	25	17,78
8810	RXL 2 - 2 / 350	2	2	275	350	25	17,78
8811	RXL 2 - 2 / 400	2	2	325	400	25	17,78
8812	RXL 2 - 2 / 450	2	2	375	450	25	17,78
8813	RXL 2 - 2 / 500	2	2	425	500	25	17,78
8814	RXL 2 - 2 / 600	2	2	525	600	25	17,78
8815	RXL 3 - 3 / 250	3	3	156	250	32	23,825
8816	RXL 3 - 3 / 300	3	3	206	300	32	23,825
8817	RXL 3 - 3 / 350	3	3	256	350	32	23,825
8818	RXL 3 - 3 / 400	3	3	306	400	32	23,825
8819	RXL 3 - 3 / 450	3	3	356	450	32	23,825
8820	RXL 3 - 3 / 500	3	3	405	500	32	23,825
8821	RXL 3 - 3 / 600	3	3	506	600	32	23,825
8822	RXL 4 - 4 / 300	4	4	182,5	300	40	31,267
8823	RXL 4 - 4 / 350	4	4	232,5	350	40	31,267
8824	RXL 4 - 4 / 400	4	4	282,5	400	40	31,267
8825	RXL 4 - 4 / 450	4	4	332,5	450	40	31,267
8826	RXL 4 - 4 / 500	4	4	382,5	500	40	31,267
8827	RXL 4 - 4 / 600	4	4	482,5	600	40	31,267

CONE EJECTORS

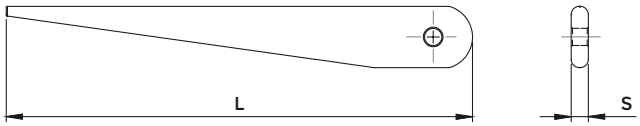

DIN 317

COD.	DESCRIPTION	CM	L	S
5235	BC.CM 0	0	90	4
5236	BC.CM 1	1	140	5
5236	BC.CM 2	2	140	5
5237	BC.CM 3	3	190	7
5238	BC.CM 4	4	225	10
5239	BC.CM 5	5	265	15
5239	BC.CM 6	6	265	15

CONE EJECTORS UNIVERSAL VERSION

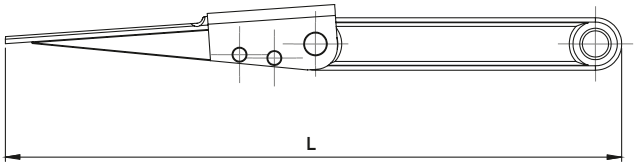

DIN 317

COD.	DESCRIPTION	CM	L
5288	BU . CM 1 - 2 - 3	1-2-3	317
5289	BU . CM 4 - 5 - 6	4-5-6	380

MORSE TAPER SHANK STORAGE

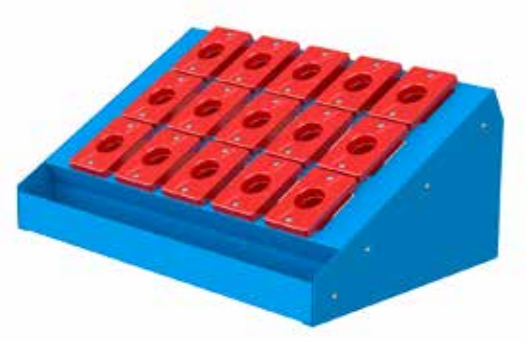

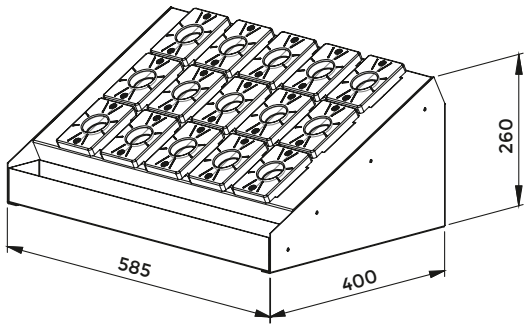

DIN 807

COD.	DESCRIPTION	MT	N° OF SEATS	MORSE TAPER BUSH	SCREW
9468	MAG. CM 2	2	15	9448	0033
9469	MAG. CM 3	3	15	9449	0033
3696	MAG. CM 4	4	15	4400	0033
3702G	MAG. CM 5	5	15	4418G	0033

Supplied complete of red tool holder bushings

BENCH SUPPORTS FOR MORSE TAPER SHANK

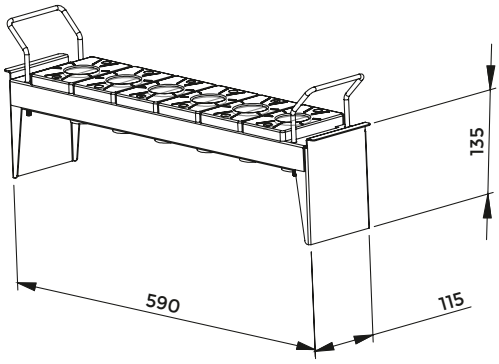

DIN 317

COD.	DESCRIPTION	MT	N° OF SEATS	MORSE TAPER BUSH
9458	UNITÀ CM 2	2	6	9448
9459	UNITÀ CM 3	3	6	9449
4329	UNITÀ CM 4	4	6	4400
4330G	UNITÀ CM 5	5	6	4418G

Supplied complete of red tool holder bushings

ER COLLETS

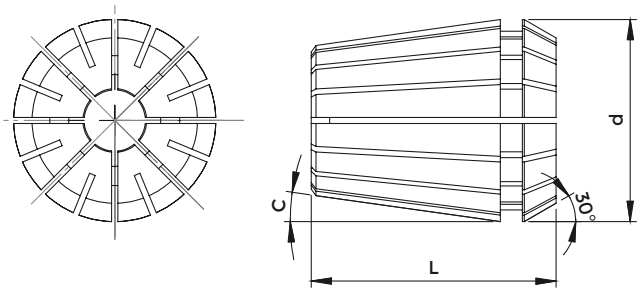

DIN 6499/B

COD.	TYPE	RANGE	CLAMPING	STEP	d	L	C	EINHEITS
0554	ER 8	1 ÷ 5	mm 0,5	0,5	8,5	13,5	8 °	4004E
5573	ER 11	1 ÷ 7 OVERSIZE 7,5 ÷ 8	mm 0,5 mm 0,5	0,5	11,5	18,0 OVERSIZE → 15,0	8 °	4008E
5601	ER 12	1 ÷ 3 3 ÷ 8	mm 0,5 mm 1,0	0,5	12	19,5	8 °	424E
0364	ER 16	1 ÷ 3 3 ÷ 10 OVERSIZE 10,5 ÷ 12	mm 0,5 mm 1,0 mm 0,5	0,5	17	27,5 OVERSIZE → 21,5	8 °	426E
0787	ER 20	1÷ 3 3 ÷ 13 OVERSIZE 14 ÷ 15	mm 0,5 mm 1,0 mm 0,5	0,5	21	31,5 OVERSIZE → 26,5	8 °	428E
0996	ER 25	1 ÷ 3 3 ÷ 16 OVERSIZE 16,5 ÷ 20	mm 0,5 mm 1,0 mm 0,5	0,5	26	34,0 OVERSIZE → 28,0	8 °	430E
0988	ER 32	2 ÷ 20 OVERSIZE 21 ÷ 25	mm 1,0 mm 0,5	0,5	33	40,0 OVERSIZE → 34,0	8 °	470E
0821	ER 40	3 ÷ 30 OVERSIZE 31 ÷ 32	mm 1,0 mm 0,5	0,5	41	46,0 OVERSIZE → 39,5	8 °	472E
4055	ER 50	6 ÷ 34 OVERSIZE 35 ÷ 36	mm 1,0 mm 1,0	1,0	52	60,0 OVERSIZE 60,0	8 °	477E
4056	ER 60	10 ÷ 40	mm 2,0	2,0	61	60	10°	494E

PLASTIC EMPTY TRAY

COD.	COLLETS	N°OF LOCATIONS
3672	ER 8	16
3673	ER 11	16
3673	ER 12	16
3674	ER 16	16
3675	ER 20	16
3676	ER 25	20
3677	ER 32	20
3678	ER 40	28

WOODEN EMPTY CASE

COD.	N°OF LOCATIONS
3974	10
3975	15
3975	15
3976	12
3977	12
3978	15
3979	18
3980	24

EMPTY CASE WITH SPINDLE SEAT

COD.	N°OF LOCATIONS
3690	16
3691	16
3691	16
3692	16
3693	16
7022	28
7023	28
7024	28

ER COLLETS - REDUCED SET

	COD.	DESCRIPTION	DIAMETERS	NUMBER OF COLLETS
IN SINGLE PACKS	7463	ER 8 Reduced	Ø 1 - 2 - 3 - 4 - 5	5
	7464	ER 11 Reduced	Ø 1 - 2 - 3 - 4 - 5 - 6 - 7	7
	7465	ER 16 Reduced	Ø 2 - 4 - 6 - 8 -10	5
	7466	ER 20 Reduced	Ø 2 - 4 - 6 - 8 -10 -12	6
	7467	ER 25 Reduced	Ø 4 - 6 - 8 -10 -12 -16	6
	7468	ER 32 Reduced	Ø 4 - 6 - 8 -10 -12 -16 - 20	7
	7469	ER 40 Reduced	Ø 4 - 6 - 8 -10 -12 -16 - 20 - 25	8
IN PLASTIC TRAY	4048	ER 8 Reduced	Ø 1 - 2 - 3 - 4 - 5	5
	4049	ER 11 Reduced	Ø 1 - 2 - 3 - 4 - 5 - 6 - 7	7
	4050	ER 16 Reduced	Ø 2 - 4 - 6 - 8 -10	5
	4051	ER 20 Reduced	Ø 2 - 4 - 6 - 8 -10 -12	6
	4052	ER 25 Reduced	Ø 4 - 6 - 8 -10 -12 -16	6
	4053	ER 32 Reduced	Ø 4 - 6 - 8 -10 -12 -16 - 20	7
	4054	ER 40 Reduced	Ø 4 - 6 - 8 -10 -12 -16 - 20 - 25	8
IN WOODEN CASE	7337	ER 8 Reduced	Ø 1 - 2 - 3 - 4 - 5	5
	7338	ER 11 Reduced	Ø 1 - 2 - 3 - 4 - 5 - 6 - 7	7
	7339	ER 16 Reduced	Ø 2 - 4 - 6 - 8 -10	5
	7340	ER 20 Reduced	Ø 2 - 4 - 6 - 8 -10 -12	6
	7341	ER 25 Reduced	Ø 4 - 6 - 8 -10 -12 -16	6
	7342	ER 32 Reduced	Ø 4 - 6 - 8 -10 -12 -16 - 20	7
	7343	ER 40 Reduced	Ø 4 - 6 - 8 -10 -12 -16 - 20 - 25	8

ER COLLETS - COMPLETE SET

	COD.	DESCRIPTION	DIAMETERS	NUMBER OF COLLETS
IN SINGLE PACKS	7470	ER 8 Complete	from Ø 1 to Ø 5 - progression 0,5	9
	7471	ER 11 Complete	from Ø 1 to Ø 7 - progression 0,5	13
	7472	ER 12 Complete	from Ø 1 to Ø 7 - progression 0,5 - 1	9
	7473	ER 16 Complete	from Ø 1 to Ø 10 - progression 1	10
	7474	ER 20 Complete	from Ø 2 to Ø 13 - progression 1	12
	7475	ER 25 Complete	from Ø 2 to Ø 16 - progression 1	15
	7476	ER 32 Complete	from Ø 3 to Ø 20 - progression 1	18
	7477	ER 40 Complete	from Ø 4 to Ø 26 - progression 1	9
IN PLASTIC TRAY	4058	ER 8 Complete	from Ø 1 to Ø 5 - progression 0,5	9
	4060	ER 11 Complete	from Ø 1 to Ø 7 - progression 0,5	13
	4061	ER 12 Complete	from Ø 1 to Ø 7 - progression 0,5 - 1	9
	4062	ER 16 Complete	from Ø 1 to Ø 10 - progression 1	10
	4063	ER 20 Complete	from Ø 2 to Ø 13 - progression 1	12
	4064	ER 25 Complete	from Ø 2 to Ø 16 - progression 1	15
	4065	ER 32 Complete	from Ø 3 to Ø 20 - progression 1	18
	4066	ER 40 Complete	from Ø 4 to Ø 26 - progression 1	9
IN WOODEN CASE	7344	ER 8 Complete	from Ø 1 to Ø 5 - progression 0,5	9
	7345	ER 11 Complete	from Ø 1 to Ø 7 - progression 0,5	13
	7346	ER 12 Complete	from Ø 1 to Ø 7 - progression 0,5 - 1	9
	7347	ER 16 Complete	from Ø 1 to Ø 10 - progression 1	10
	7348	ER 20 Complete	from Ø 2 to Ø 13 - progression 1	12
	7349	ER 25 Complete	from Ø 2 to Ø 16 - progression 1	15
	7350	ER 32 Complete	from Ø 3 to Ø 20 - progression 1	18
	7351	ER 40 Complete	from Ø 4 to Ø 26 - progression 1	23

ER COLLETS - SET WITH OVERSIZE DIAMETERS

	COD.	DESCRIPTION	DIAMETERS	STEP	N°OF COLLETS
IN PLASTIC TRAY	7352	ER 11 Oversize	from Ø 1 to Ø 8	0,5	15
	7353	ER 16 Oversize	from Ø 1 to Ø 12	1	12
	7354	ER 20 Oversize	from Ø 2 to Ø 15	1	14
	7355	ER 25 Oversize	from Ø 2 to Ø 20	1	19
	7356	ER 32 Oversize	from Ø 6 to Ø 25	1	20
	7357	ER 40 Oversize	from Ø 6 to Ø 32	1	27

ER COLLETS – COMPLETE SET

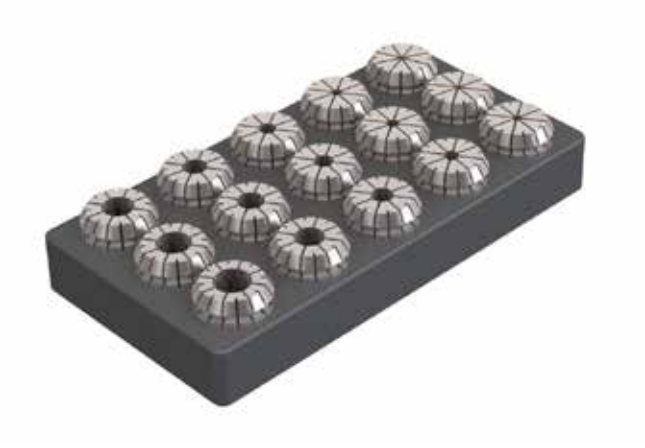

	COD.	DESCRIPTION	DIAMETERS	N°OF COLLETS
IN PLASTIC TRAY	7746	ER 16 Integrale	da Ø 1 a Ø 10 **+ half measures** da Ø 1,5 a Ø 9,5	19
	7747	ER 20 Integrale	da Ø 1 a Ø 13 **+ half measures** da Ø 1,5 a Ø 12,5	25
	7748	ER 25 Integrale	da Ø 1 a Ø 16 **+ half measures** da Ø 1,5 a Ø 15,5	31
	7749	ER 32 Integrale	da Ø 2 a Ø 20 **+ half measures** da Ø2,5 a Ø 19,5	37
	7750	ER 40 Integrale	da Ø 3 a Ø 30	28

ER COLLETS - REDUCED SET IN CASE WITH SPINDLE SEAT

COD.	DESCRIPTION	DIAMETERS	N°OF COLLETS
7487	ER 8 Set Reduced	Ø 1 - 2 - 3 - 4 - 5	5
7488	ER 11 Set Reduced	Ø 1 - 2 - 3 - 4 - 5 - 6 - 7	7
7489	ER 16 Set Reduced	Ø 2 - 4 - 6 - 8 -10	5
7490	ER 20 Set Reduced	Ø 2 - 4 - 6 - 8 -10 -12	6
7491	ER 25 Set Reduced	Ø 4 - 6 - 8 -10 -12 -16	6
7492	ER 32 Set Reduced	Ø 4 - 6 - 8 -10 -12 -16 - 20	7
7493	ER 40 Set Reduced	Ø 4 - 6 - 8 -10 -12 -16 - 20 - 25	8

It is possible to complete all the sets in case with collet chuck and wrench you need

ER COLLETS - COMPLETE SET IN CASE WITH SPINDLE SEAT

COD.	DESCRIPTION	DIAMETERS	N°OF COLLETS
7551	ER 8 Set Complete	from Ø 1 to Ø 5 - progression 0,5	9
7552	ER 11 Set Complete	from Ø 1 to Ø 7 - progression 0,5	13
7599	ER 12 Set Complete	from Ø 1 to Ø 7 - progression 0,5 - 1	9
7553	ER 16 Set Complete	from Ø 1 to Ø 10 - progression 1	10
7554	ER 20 Set Complete	from Ø 2 to Ø 13 - progression 1	12
7555	ER 25 Set Complete	from Ø 2 to Ø 16 - progression 1	15
7556	ER 32 Set Complete	from Ø 3 to Ø 20 - progression 1	18
7557	ER 40 Set Complete	from Ø 4 to Ø 26 - progression 1	23

It is possible to complete all the sets in case with collet chuck and wrench you need

ER COLLETS - REDUCED SET AND MINI WRENCH IN CASE WITH SPINDLE SEAT

COD.	DESCRIPTION	DIAMETERS	N°OF COLLETS	WRENCH
7751	ER 8 Reduced + Mini Wrench	Ø 1 - 2 - 3 - 4 - 5	5	5717
7752	ER 11 Reduced + Mini Wrench	Ø 1 - 2 - 3 - 4 - 5 - 6 - 7	7	5718
7753	ER 16 Reduced + Mini Wrench	Ø 2 - 4 - 6 - 8 - 10	5	5719
7754	ER 20 Reduced + Mini Wrench	Ø 2 - 4 - 6 - 8 - 10 - 12	6	5720
7755	ER 25 Reduced + Mini Wrench	Ø 4 - 6 - 8 -10 - 12 - 16	6	5721

It is possible to complete all the sets in case with collet chuck and wrench you need

ER COLLETS - COMPLETE SET AND MINI WRENCH IN CASE WITH SPINDLE SEAT

COD.	DESCRIPTION	DIAMETERS	N°OF COLLETS	WRENCH
7001	ER 8 Complete + WRENCH Mini	da Ø 1 a Ø 5	9	5717
7002	ER 11 Complete + WRENCH Mini	da Ø 1 a Ø 7	13	5718
7003	ER 16 Complete + WRENCH Mini	da Ø 1 a Ø 10	10	5719
7004	ER 20 Complete + WRENCH Mini	da Ø 2 a Ø 13	12	5720
7005	ER 25 Complete + WRENCH Mini	da Ø 2 a Ø 16	15	5721

It is possible to complete all the sets in case with collet chuck and wrench you need

ER COLLETS - REDUCED SET AND STANDARD WRENCH IN CASE WITH SPINDLE SEAT

COD.	DESCRIPTION	DIAMETERS	N°OF COLLETS	WRENCH
7495	ER 16 Reduced + Standard Wrench	Ø 2 - 4 - 6 - 8 - 10	5	3698
7496	ER 20 Reduced + Standard Wrench	Ø 2 - 4 - 6 - 8 - 10 - 12	6	3699
7497	ER 25 Reduced + Standard Wrench	Ø 4 - 6 - 8 - 10 - 12 - 16	6	3669
7498	ER 32 Reduced + Standard Wrench	Ø 4 - 6 - 8 - 10 - 12 -16 - 20	7	3670
7499	ER 40 Reduced + Standard Wrench	Ø 4 - 6 - 8 - 10 - 12 - 16 - 20 - 25	8	3671

It is possible to complete all the sets in case with collet chuck and wrench you need

ER COLLETS - COMPLETE SET AND STANDARD WRENCH IN CASE WITH SPINDLE SEAT

COD.	DESCRIPTION	DIAMETERS	N°OF COLLETS	WRENCH
7536	ER 16 Complete + Standard Wrench	from Ø 1 to Ø 10	10	3698
7537	ER 20 Complete + Standard Wrench	from Ø 2 to Ø 13	12	3699
7538	ER 25 Complete + Standard Wrench	from Ø 2 to Ø 16	15	3669
7539	ER 32 Complete + Standard Wrench	from Ø 3 to Ø 20	18	3670
7540	ER 40 Complete + Standard Wrench	from Ø 4 to Ø 26	23	3671

It is possible to complete all the sets in case with collet chuck and wrench you need

HIGH PRECISION ER COLLETS

ER-HP collets are different from ER standard collets on p. pagina 617 because of the high precision:
< 0,005 runout accuracy

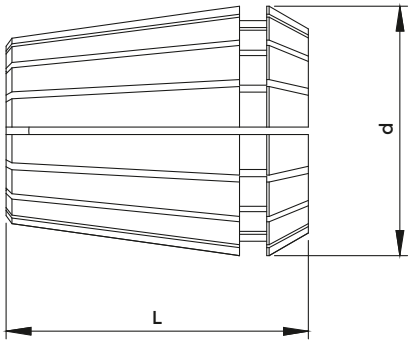

DIN 6499/B

COD.	DESCRIPTION	RANGE	d	L
0554 HP	ER 8 HP	1 ÷ 5	8,5	13,5
5573 HP	ER 11 HP	1 ÷ 7 - OVERSIZE 7,5 ÷ 8	11,5	18,0 - OVERSIZE → 15,0
0364 HP	ER 16 HP	1 ÷ 10 - OVERSIZE 10,5 ÷ 12	17	27,5 - OVERSIZE → 21,5
0787 HP	ER 20 HP	1 ÷ 13 - OVERSIZE 14 ÷ 15	21	31,5 - OVERSIZE → 26,5
0996 HP	ER 25 HP	1 ÷ 16 - OVERSIZE 17 ÷ 20	26	34,0 - OVERSIZE → 28,0
0988 HP	ER 32 HP	2 ÷ 20 - OVERSIZE 21 ÷ 25	33	40,0 - OVERSIZE → 34,0
0821 HP	ER 40 HP	3 ÷ 30 - OVERSIZE 31 ÷ 32	41	46,0 - OVERSIZE → 39,5
4055 HP	ER 50 HP	6 ÷ 34 - OVERSIZE 35 ÷ 36	52	60,0 - OVERSIZE 60,0

REDUCED SET OF COLLETS ER-HP TYPE

	COD.	DESCRIPTION	DIAMETERS	N°OF COLLETS
IN PLASTIC TRAY	7558	ER 8 HP Reduced	Ø 1 - 2 - 3 - 4 - 5	5
	7559	ER 11 HP Reduced	Ø 1 - 2 - 3 - 4 - 5 - 6 - 7	7
	7560	ER 16 HP Reduced	Ø 2 - 4 - 6 - 8 - 10	5
	7561	ER 20 HP Reduced	Ø 2 - 4 - 6 - 8 - 10 - 12	6
	7562	ER 25 HP Reduced	Ø 4 - 6 - 8 - 10 - 12 - 16	6
	7563	ER 32 HP Reduced	Ø 4 - 6 - 8 - 10 - 12 - 16 - 20	7
	7564	ER 40 HP Reduced	Ø 4 - 6 - 8 - 10 - 12 - 16 - 20 - 25	8
IN WOODEN CASE	7572	ER 8 HP Reduced	Ø 1 - 2 - 3 - 4 - 5	5
	7573	ER 11 HP Reduced	Ø 1 - 2 - 3 - 4 - 5 - 6 - 7	7
	7574	ER 16 HP Reduced	Ø 2 - 4 - 6 - 8 - 10	5
	7575	ER 20 HP Reduced	Ø 2 - 4 - 6 - 8 - 10 - 12	6
	7576	ER 25 HP Reduced	Ø 4 - 6 - 8 - 10 - 12 - 16	6
	7577	ER 32 HP Reduced	Ø 4 - 6 - 8 - 10 - 12 - 16 - 20	7
	7578	ER 40 HP Reduced	Ø 4 - 6 - 8 - 10 - 12 - 16 - 20 - 25	8

COMPLETE SET OF COLLETS ER-HP TYPE

	COD.	DESCRIPTION	DIAMETERS	N°OF COLLETS
IN PLASTIC TRAY	7565	ER 8 HP Complete	from Ø 1 to Ø 5	9
	7566	ER 11 HP Complete	from Ø 1 to Ø 7	13
	7567	ER 16 HP Complete	from Ø 1 to Ø 10	10
	7568	ER 20 HP Complete	from Ø 2 to Ø 13	12
	7569	ER 25 HP Complete	from Ø 2 to Ø 16	15
	7570	ER 32 HP Complete	from Ø 3 to Ø 20	18
	7571	ER 40 HP Complete	from Ø 4 to Ø 26	23
IN WOODEN CASE	7579	ER 8 HP Complete	from Ø 1 to Ø 5	9
	7580	ER 11 HP Complete	from Ø 1 to Ø 7	13
	7581	ER 16 HP Complete	from Ø 1 to Ø 10	10
	7582	ER 20 HP Complete	from Ø 2 to Ø 13	12
	7583	ER 25 HP Complete	from Ø 2 to Ø 16	15
	7584	ER 32 HP Complete	from Ø 3 to Ø 20	18
	7585	ER 40 HP Complete	from Ø 4 to Ø 26	23

ER COLLETS WITH COOLANT HOLES

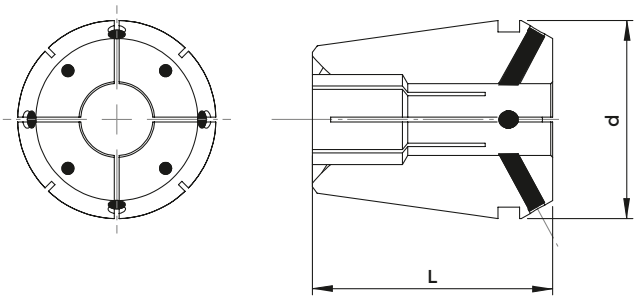

Coolant flows towards the edges of the tool through oriented holes. Working pressure: up to 40 Bar / 600 PSI

DIN 6499/A

COD.	DESCRIPTION	RANGE	d	L	STEP
0364 JE	ER 16 JET	3 ÷ 7	17	27,5	0,5
0787 JE	ER 20 JET	3 ÷ 9	21	31,5	0,5
0996 JE	ER 25 JET	3 ÷ 14	26	34	0,5
0988 JE	ER 32 JET	3 ÷ 20	33	40	0,5
0821 JE	ER 40 JET	4 ÷ 26	41	46	1
4055 JE	ER 50 JET	6 ÷ 34	52	60	1

REDUCED SET OF COLLETS ER-JET TYPE

	COD.	DESCRIPTION	DIAMETERS	N°OF COLLETS
IN PLASTIC TRAY	7637	ER 25 JET Reduced	Ø 4 - 6 - 8 -10 -12	5
	7638	ER 32 JET Reduced	Ø 4 - 6 - 8 -10 -12 -16 - 20	7
	7639	ER 40 JET Reduced	Ø 4 - 6 - 8 -10 -12 -16 - 20 - 25	8
IN WOODEN CASE	7647	ER 25 JET Reduced	Ø 4 - 6 - 8 -10 -12	5
	7648	ER 32 JET Reduced	Ø 4 - 6 - 8 -10 -12 -16 - 20	7
	7649	ER 40 JET Reduced	Ø 4 - 6 - 8 -10 -12 -16 - 20 - 25	8

COMPLETE SET OF COLLETS ER-JET TYPE

	COD.	DESCRIPTION	DIAMETERS	N°OF COLLETS
IN PLASTIC TRAY	7640	ER 16 JET Complete	from Ø 3 to Ø 7	5
	7641	ER 20 JET Complete	from Ø 3 to Ø 9	7
	7642	ER 25 JET Complete	from Ø 3 to Ø 14	12
	7643	ER 32 JET Complete	from Ø 3 to Ø 20	18
	7644	ER 40 JET Complete	from Ø 4 to Ø 26	23
IN WOODEN CASE	7650	ER 16 JET Complete	from Ø 3 to Ø 7	5
	7651	ER 20 JET Complete	from Ø 3 to Ø 9	7
	7652	ER 25 JET Complete	from Ø 3 to Ø 14	12
	7653	ER 32 JET Complete	from Ø 3 to Ø 20	18
	7654	ER 40 JET Complete	from Ø 4 to Ø 26	23

SEALED ER COLLETS

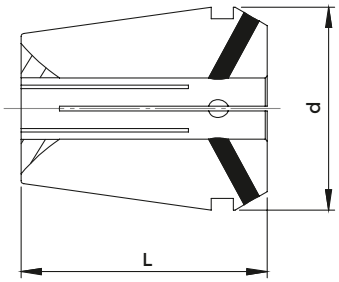

Coolant flows exclusively through central hole, collet cuts are sealed with neoprene inserts (above Ø 3). Working pressure: up to 40 Bar / 600 PSI

DIN 6499/A

COD.	DESCRIPTION	RANGE	d	L	STEP
5573 RF	ER 11 RF	1 ÷ 7	11,5	18	0,5
0364 RF	ER 16 RF	1 ÷ 10	17	27,5	0,5
0787 RF	ER 20 RF	2 ÷ 13	21	31,5	0,5
0996 RF	ER 25 RF	2 ÷ 16	26	34	0,5
0988 RF	ER 32 RF	3 ÷ 20	33	40	0,5
0821 RF	ER 40 RF	4 ÷ 26	41	46	1
4055 RF	ER 50 RF	6 ÷ 34	52	60	1

REDUCED SET OF COLLETS RF TYPE

	COD.	DESCRIPTION	DIAMETERS	N°OF COLLETS
IN PLASTIC TRAY	7587	ER 16 RF Reduced	Ø 4 - 6 - 8 -10	4
	7588	ER 20 RF Reduced	Ø 4 - 6 - 8 -10 -12	5
	7589	ER 25 RF Reduced	Ø 4 - 6 - 8 -10 -12 -16	6
	7590	ER 32 RF Reduced	Ø 4 - 6 - 8 -10 -12 -16 - 20	7
	7591	ER 40 RF Reduced	Ø 4 - 6 - 8 -10 -12 -16 - 20 - 25	8
IN WOODEN CASE	7600	ER 16 RF Reduced	Ø 4 - 6 - 8 -10	4
	7601	ER 20 RF Reduced	Ø 4 - 6 - 8 -10 -12	5
	7602	ER 25 RF Reduced	Ø 4 - 6 - 8 -10 -12 -16	6
	7603	ER 32 RF Reduced	Ø 4 - 6 - 8 -10 -12 -16 - 20	7
	7604	ER 40 RF Reduced	Ø 4 - 6 - 8 -10 -12 -16 - 20 - 25	8

COMPLETE SET OF COLLETS RF TYPE

	COD.	DESCRIPTION	DIAMETERS	N°OF COLLETS
IN PLASTIC TRAY	7593	ER 16 RF Complete	from Ø 3 to Ø 10	8
	7594	ER 20 RF Complete	from Ø 3 to Ø 13	11
	7595	ER 25 RF Complete	from Ø 3 to Ø 16	14
	7596	ER 32 RF Complete	from Ø 3 to Ø 20	18
	7597	ER 40 RF Complete	from Ø 4 to Ø 26	23
IN WOODEN CASE	7606	ER 16 RF Complete	from Ø 3 to Ø 10	8
	7607	ER 20 RF Complete	from Ø 3 to Ø 13	11
	7608	ER 25 RF Complete	from Ø 3 to Ø 16	14
	7609	ER 32 RF Complete	from Ø 3 to Ø 20	18
	7610	ER 40 RF Complete	from Ø 4 to Ø 26	23

ULTRA PRECISION SEALED ER COLLETS

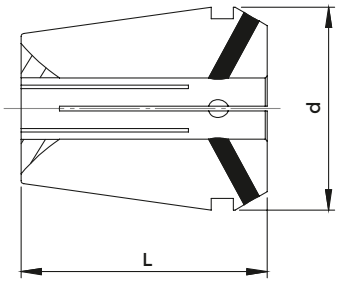

Collets with the same features of RF type but with an ultra precision: ≤ 0,005 runout accuracy. Working pressure: up to 40 Bar / 600 PSI

DIN 6499/A

COD.	DESCRIPTION	RANGE	d	L	STEP
5573 UP	ER 11 RF - UP	1 ÷ 7	11,5	18	0,5
0364 UP	ER 16 RF - UP	1 ÷ 10	17	27,5	0,5
0787 UP	ER 20 RF - UP	2 ÷ 13	21	31,5	0,5
0996 UP	ER 25 RF - UP	2 ÷ 16	26	34	0,5
0988 UP	ER 32 RF - UP	3 ÷ 20	33	40	0,5
0821 UP	ER 40 RF - UP	4 ÷ 26	41	46	1
4055 UP	ER 50 RF - UP	6 ÷ 34	52	60	1

REDUCED SET OF COLLETS RF-UP TYPE

	COD.	DESCRIPTION	DIAMETERS	N°OF COLLETS
IN PLASTIC TRAY	7612	ER 16 UP Reduced	Ø 4 - 6 - 8 - 10	4
	7613	ER 20 UP Reduced	Ø 4 - 6 - 8 - 10 - 12	5
	7614	ER 25 UP Reduced	Ø 4 - 6 - 8 - 10 - 12 - 16	6
	7615	ER 32 UP Reduced	Ø 4 - 6 - 8 - 10 - 12 - 16 - 20	7
	7616	ER 40 UP Reduced	Ø 4 - 6 - 8 -10 - 12 - 16 - 20 - 25	8
IN WOODEN CASE	7624	ER 16 UP Reduced	Ø 4 - 6 - 8 - 10	4
	7625	ER 20 UP Reduced	Ø 4 - 6 - 8 - 10 - 12	5
	7626	ER 25 UP Reduced	Ø 4 - 6 - 8 - 10 - 12 - 16	6
	7627	ER 32 UP Reduced	Ø 4 - 6 - 8 - 10 - 12 - 16 - 20	7
	7628	ER 40 UP Reduced	Ø 4 - 6 - 8 -10 - 12 - 16 - 20 - 25	8

COMPLETE SET OF COLLETS RF-UP TYPE

	COD.	DESCRIPTION	DIAMETERS	N°OF COLLETS
IN PLASTIC TRAY	7618	ER 16 UP Complete	from Ø 3 to Ø 10	8
	7619	ER 20 UP Complete	from Ø 3 to Ø 13	11
	7620	ER 25 UP Complete	from Ø 3 to Ø 16	14
	7621	ER 32 UP Complete	from Ø 3 to Ø 20	18
	7622	ER 40 UP Complete	from Ø 4 to Ø 26	23
IN WOODEN CASE	7630	ER 16 UP Complete	from Ø 3 to Ø 10	8
	7631	ER 20 UP Complete	from Ø 3 to Ø 13	11
	7632	ER 25 UP Complete	from Ø 3 to Ø 16	14
	7633	ER 32 UP Complete	from Ø 3 to Ø 20	18
	7634	ER 40 UP Complete	from Ø 4 to Ø 26	23

STEEL SEALED ER COLLETS FOR HIGH PRESSURES

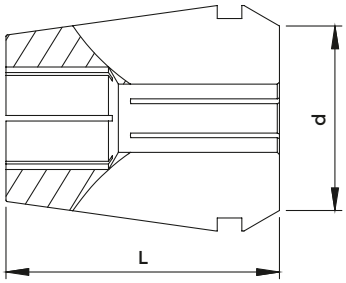

Coolant flows exclusively through central hole, due to cuts shape. Working pressure: up to 130 BAR / 1900 PSI

DIN 6499/A

COD.	DESCRIPTION	RANGE	d	L	STEP
5573 SC	ER 11 SSC	3 ÷ 7 OVERSIZE 7,5 ÷ 8	11,5	18,0 OVERSIZE → 15,0	0,5
0364 SC	ER 16 SSC	3 ÷ 10 OVERSIZE 10,5 ÷ 12	17	27,5 OVERSIZE → 21,5	0,5
0787 SC	ER 20 SSC	3 ÷ 13 OVERSIZE 13,5 ÷ 15	21	31,5 OVERSIZE → 26,5	0,5
0996 SC	ER 25 SSC	3 ÷ 16 OVERSIZE 16,5 ÷ 20	26	34,0 OVERSIZE → 28,0	0,5
0988 SC	ER 32 SSC	3 ÷ 20 OVERSIZE 20,5 ÷ 25	33	40,0 OVERSIZE → 34,0	0,5
0821 SC	ER 40 SSC	3 ÷ 30 OVERSIZE 31 ÷ 32	41	46,0 OVERSIZE → 39,5	1

REDUCED SET OF COLLETS ER-SSC TYPE

	COD.	DESCRIPTION	DIAMETERS	N°OF COLLETS
IN PLASTIC TRAY	7670	ER 16 SSC Reduced	Ø 4 - 6 - 8 - 10	4
	7671	ER 20 SSC Reduced	Ø 4 - 6 - 8 - 10 - 12	5
	7672	ER 25 SSC Reduced	Ø 4 - 6 - 8 - 10 - 12 - 16	6
	7673	ER 32 SSC Reduced	Ø 4 - 6 - 8 - 10 - 12 - 16 - 20	7
	7674	ER 40 SSC Reduced	Ø 4 - 6 - 8 - 10 - 12 - 16 - 20 - 25	8
IN WOODEN CASE	7690	ER 16 SSC Reduced	Ø 4 - 6 - 8 - 10	4
	7691	ER 20 SSC Reduced	Ø 4 - 6 - 8 - 10 - 12	5
	7692	ER 25 SSC Reduced	Ø 4 - 6 - 8 - 10 - 12 - 16	6
	7693	ER 32 SSC Reduced	Ø 4 - 6 - 8 - 10 - 12 - 16 - 20	7
	7694	ER 40 SSC Reduced	Ø 4 - 6 - 8 - 10 - 12 - 16 - 20 - 25	8

COMPLETE SET OF COLLETS ER-SSC TYPE

	COD.	DESCRIPTION	DIAMETERS	N°OF COLLETS
IN PLASTIC TRAY	7675	ER 16 SSC Complete	from Ø 3 to Ø 10	8
	7676	ER 20 SSC Complete	from Ø 3 to Ø 13	11
	7677	ER 25 SSC Complete	from Ø 3 to Ø 16	14
	7678	ER 32 SSC Complete	from Ø 3 to Ø 20	18
	7679	ER 40 SSC Complete	from Ø 4 to Ø 26	23
IN WOODEN CASE	7695	ER 16 SSC Complete	from Ø 3 to Ø 10	8
	7696	ER 20 SSC Complete	from Ø 3 to Ø 13	11
	7697	ER 25 SSC Complete	from Ø 3 to Ø 16	14
	7698	ER 32 SSC Complete	from Ø 3 to Ø 20	18
	7699	ER 40 SSC Complete	from Ø 4 to Ø 26	23

HIGH PRECISION STEEL SEALED ER COLLETS FOR HIGH PRESSURES

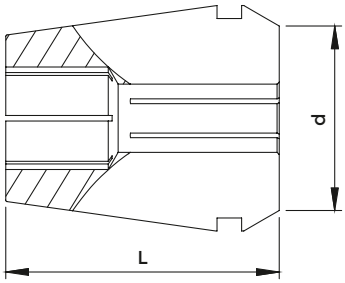

Collets with the same cooling mechanical seal features of SSC type, but with an high precision: ≤ 0,005 mm runout accurancy. Working pressure: up to 130 Bar / 1900 PSI.

DIN 6499/A

COD.	DESCRIPTION	RANGE	d	L
5573 SH	ER 11 SSC - HP	3 ÷ 7 OVERSIZE 7,5 ÷ 8	11,5	18,0 OVERSIZE → 15,0
0364 SH	ER 16 SSC - HP	3 ÷ 10 OVERSIZE 10,5 ÷ 12	17	27,5 OVERSIZE → 21,5
0787 SH	ER 20 SSC - HP	3 ÷ 13 OVERSIZE 13,5 ÷ 15	21	31,5 OVERSIZE → 26,5
0996 SH	ER 25 SSC - HP	3 ÷ 16 OVERSIZE 16,5 ÷ 20	26	34,0 OVERSIZE → 28,0
0988 SH	ER 32 SSC - HP	3 ÷ 20 OVERSIZE 20,5 ÷ 25	33	40,0 OVERSIZE → 34,0
0821 SH	ER 40 SSC - HP	3 ÷ 30 OVERSIZE 31 ÷ 32	41	46,0 OVERSIZE → 39,5

REDUCED SET OF COLLETS SSC - HP TYPE

	COD.	DESCRIPTION	DIAMETERS	N°OF COLLETS
IN PLASTIC TRAY	7360	ER 16 SH Reduced	Ø 4 - 6 - 8 - 10	4
	7361	ER 20 SH Reduced	Ø 4 - 6 - 8 - 10 - 12	5
	7362	ER 25 SH Reduced	Ø 4 - 6 - 8 - 10 - 12 - 16	6
	7363	ER 32 SH Reduced	Ø 4 - 6 - 8 - 10 - 12 - 16 - 20	7
	7364	ER 40 SH Reduced	Ø 4 - 6 - 8 - 10 - 12 - 16 - 20 - 25	8
IN WOODEN CASE	7370	ER 16 SH Reduced	Ø 4 - 6 - 8 - 10	4
	7371	ER 20 SH Reduced	Ø 4 - 6 - 8 - 10 - 12	5
	7372	ER 25 SH Reduced	Ø 4 - 6 - 8 - 10 - 12 - 16	6
	7373	ER 32 SH Reduced	Ø 4 - 6 - 8 - 10 - 12 - 16 - 20	7
	7374	ER 40 SH Reduced	Ø 4 - 6 - 8 - 10 - 12 - 16 - 20 - 25	8

COMPLETE SET OF COLLETS SSC - HP TYPE

	COD.	DESCRIPTION	DIAMETERS	N°OF COLLETS
IN PLASTIC TRAY	7365	ER 16 SH Complete	from Ø 3 to Ø 10	8
	7366	ER 20 SH Complete	from Ø 3 to Ø 13	11
	7367	ER 25 SH Complete	from Ø 3 to Ø 16	14
	7368	ER 32 SH Complete	from Ø 3 to Ø 20	18
	7369	ER 40 SH Complete	from Ø 4 to Ø 26	23
IN WOODEN CASE	7375	ER 16 SH Complete	from Ø 3 to Ø 10	8
	7376	ER 20 SH Complete	from Ø 3 to Ø 13	11
	7377	ER 25 SH Complete	from Ø 3 to Ø 16	14
	7378	ER 32 SH Complete	from Ø 3 to Ø 20	18
	7379	ER 40 SH Complete	from Ø 4 to Ø 26	23

ER COLLETS WITH SQUARE FOR TAPPING

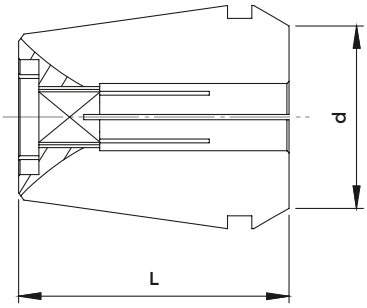

The drag square for the tapping tool is made on the bottom of the collet.

DIN 6499/A

COD.	DESCRIPTION	RANGE	d	L
5573 MF	ER 11 MF - con Quadro	Ø 3,5 ÷ Ø 6,0	11,5	18
0364 MF	ER 16 MF - con Quadro	Ø 3,5 ÷ Ø 8,0	17	27,5
0787 MF	ER 20 MF - con Quadro	Ø 3,5 ÷ Ø 10,0	21	31,5
0996 MF	ER 25 MF - con Quadro	Ø 3,5 ÷ Ø 12,0	26	34
0988 MF	ER 32 MF - con Quadro	Ø 3,5 ÷ Ø 16,0	33	40
0821 MF	ER 40 MF - con Quadro	Ø 4,5 ÷ Ø 20,0	41	46
4055 MF	ER 50 MF - con Quadro	Ø 8,0 ÷ Ø 32,0	52	60

REDUCED SET OF COLLETS ER-MF TYPE

	COD.	DESCRIPTION	DIAMETERS	N°OF COLLETS
IN PLASTIC TRAY	7655	ER 16 MF Reduced	Ø 3,5 - 4,5 - 6 - 7	4
	7656	ER 20 MF Reduced	Ø 3,5 - 4,5 - 6 - 7 - 8 - 9 - 10	7
	7657	ER 25 MF Reduced	Ø 3,5 - 4,5 - 6 - 7 - 8 - 9 - 10 - 11 - 12	9
	7658	ER 32 MF Reduced	Ø 4,5 - 6 - 7 - 8 - 9 - 10 - 11 - 12 - 14 - 16	10
	7659	ER 40 MF Reduced	Ø 6 - 7 - 8 - 9 - 10 - 11 - 12 - 14 - 16 - 18 - 20	11
IN WOODEN CASE	7660	ER 16 MF Reduced	Ø 3,5 - 4,5 - 6 - 7	4
	7661	ER 20 MF Reduced	Ø 3,5 - 4,5 - 6 - 7 - 8 - 9 - 10	7
	7662	ER 25 MF Reduced	Ø 3,5 - 4,5 - 6 - 7 - 8 - 9 - 10 - 11 - 12	9
	7663	ER 32 MF Reduced	Ø 4,5 - 6 - 7 - 8 - 9 - 10 - 11 - 12 - 14 - 16	10
	7664	ER 40 MF Reduced	Ø 6 - 7 - 8 - 9 - 10 - 11 - 12 - 14 - 16 - 18 - 20	11

ER COLLETS WITH SQUARE FOR TAPPING

The drag square for the tapping tool is made on the bottom of the collet. Coolant flows exclusively through central hole, collet cuts are sealed with neoprene inserts.
Working pressure:
up to 40 Bar / 600 PSI

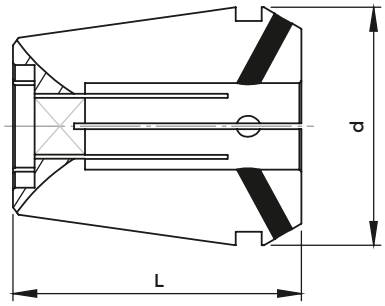

DIN 6499/A

COD.	DESCRIPTION	RANGE	d	L
5573 ML	ER 11 ML - con Quadro	Ø 3,5 ÷ Ø 6,0	11,5	18
0364 ML	ER 16 ML - con Quadro	Ø 3,5 ÷ Ø 8,0	17	27,5
0787 ML	ER 20 ML - con Quadro	Ø 3,5 ÷ Ø 10,0	21	31,5
0996 ML	ER 25 ML - con Quadro	Ø 3,5 ÷ Ø 12,0	26	34
0988 ML	ER 32 ML - con Quadro	Ø 3,5 ÷ Ø 16,0	33	40
0821 ML	ER 40 ML - con Quadro	Ø 4,5 ÷ Ø 20,0	41	46
4055 ML	ER 50 ML - con Quadro	Ø 8,0 ÷ Ø 32,0	52	60

REDUCED SET OF COLLETS ER-ML TYPE

	COD.	DESCRIPTION	DIAMETERS	N°OF COLLETS
IN PLASTIC TRAY	7756	ER 16 ML Reduced	Ø 3,5 - 4,5 - 6 - 7	4
	7757	ER 20 ML Reduced	Ø 3,5 - 4,5 - 6 - 7 - 8 - 9 - 10	7
	7758	ER 25 ML Reduced	Ø 3,5 - 4,5 - 6 - 7 - 8 - 9 - 10 - 11 - 12	9
	7759	ER 32 ML Reduced	Ø 4,5 - 6 - 7 - 8 - 9 - 10 - 11 - 12 - 14 - 16	10
	7760	ER 40 ML Reduced	Ø 6 - 7 - 8 - 9 - 10 - 11 - 12 - 14 - 16 - 18 - 20	11
IN WOODEN CASE	7761	ER 16 ML Reduced	Ø 3,5 - 4,5 - 6 - 7	4
	7762	ER 20 ML Reduced	Ø 3,5 - 4,5 - 6 - 7 - 8 - 9 - 10	7
	7763	ER 25 ML Reduced	Ø 3,5 - 4,5 - 6 - 7 - 8 - 9 - 10 - 11 - 12	9
	7764	ER 32 ML Reduced	Ø 4,5 - 6 - 7 - 8 - 9 - 10 - 11 - 12 - 14 - 16	10
	7765	ER 40 ML Reduced	Ø 6 - 7 - 8 - 9 - 10 - 11 - 12 - 14 - 16 - 18 - 20	11

ER COLLETS – TENSION ADJUSTMENT

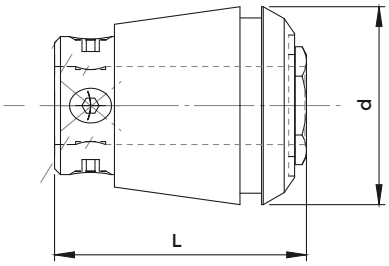

Tapping tool is clamped by the screws placed on the mobile part.

DIN 6499

COD.	DESCRIPTION	RANGE	d	L	T	STOP RING
						C
0364 AM	ER 16 - Compensate	Ø 2,0 ÷ Ø 6,0	17	27	7	9395
0787 AM	ER 20 - Compensate	Ø 2,5 ÷ Ø 7,0	21	31	7	9396
0996 AM	ER 25 - Compensate	Ø 2,5 ÷ Ø 10,0	26	34	8	9397
0988 AM	ER 32 - Compensate	Ø 4,5 ÷ Ø 12,5	33	43	10	9398
0821 AM	ER 40 - Compensate	Ø 6,0 ÷ Ø 16,0	41	54	13	9399

REDUCED SET OF ER-AM COLLETS

	COD.	DESCRIPTION	DIAMETERS	N°OF COLLETS
IN WOODEN CASE	7741	ER 16 AM Reduced	Ø 2,5 - 2,8 - 3,5 - 4,5 - 6	5
	7742	ER 20 AM Reduced	Ø 2,5 - 2,8 - 3,5 - 4,5 - 6 - 7	6
	7743	ER 25 AM Reduced	Ø 3,5 - 4,5 - 6 - 7 - 8 - 9 - 10	7
	7744	ER 32 AM Reduced	Ø 4,5 - 6 - 7 - 8 - 9 - 10 - 11 - 12	8
	7745 *	ER 40 AM Reduced	Ø 6 - 7 - 8 - 9 - 10 - 11 - 12 - 14 - 16	9

*Supplied into plastic case code 7024

SHANKS DIMENSIONS FOR METRIC TAPPING TOOLS

SHANK Ø x	STANDARD DIN 352	REINFORCED DIN 371	STANDARD DIN 376	STANDARD ISO	REINFORCED ISO
2,50 x 2,10	M 1,0 ÷ M 1,8	M 1,0 ÷ M 1,8	M 3,5	-	-
2,80 x 2,10	M 2,0 ÷ M 2,5	M 2,0 ÷ M 2,5	M 4,0	-	-
3,15 x 2,50	-	-	-	M 4,0	M 3,0
3,50 x 2,70	M 3,0	M 3,0	M 5,0	-	-
3,55 x 2,80	-	-	-	M 4,5	M 3,5
4,00 x 3,15	M 3,5	M 3,5	-	M 5,0	M 4,0
4,50 x 3,40	M 4,0	M 4,0	M 6,0	-	
5,00 x 4,00	-	-	-	-	M 5,0
5,50 x 4,30	-	-	M 7,0	-	-
5,60 x 4,50	-	-	-	M 7,0	-
6,00 x 4,90	M 5,0 - M 6,0 - M 8,0	M 5,0 - M 6,0	M 8,0		-
6,30 x 5,00	-	-	-	M 8,0	M 6,0
7,00 x 5,50	M 10,0		M 10,0	-	-
7,10 x 5,60	-	-	-	M 9,0	-
8,00 x 6,20	-	M 8,0	-	M 10,0	M 8,0
9,00 x 7,00	M 12,0	-	M 12,0	M 12,0	-
10,00 x 8,00	-	M 10,0		-	M 10,0
11,00 x 9,00	M 14,0	-	M 14,0	-	-
11,20 x 9,00	-	-	-	M 14,0	-
12,00 x 9,00	M 16,0	-	M 16,0	-	-
12,50 x 10,00	-	-	-	M 16,0	-
14,00 x 11,00	M 18,0	-	M 18,0	-	-
16,00 x 12,00	M 20,0	-	M 20,0	-	-
18,00 x 14,50	M 22,0 - M 24,0	-	M 22,0 - M 24,0	-	-
20,00 x 16,00	M 27,0	-	M 27,0	M 27,0 - M 30,0	-
22,00 x 18,00	M 30,0	-	M 30,0	-	-
25,00 x 20,00	M 33,0	-	M 33,0	M 36,0	-
28,00 x 22,00	M 36,0	-	M 36,0	-	-
32,00 x 24,00	M 39,0 - M 42,0	-	M 39,0 - M 42,0	-	-

ER NUTS INNER THREADS

NUT	ER 8	ER 11	ER 16	ER 20	ER 25	ER 32	ER 40	ER 50	ER 60	ER 90
MINI	10 x 0,75	13 x 0,75	19 x 1,0	24 x 1,0	30 x 1,0	-	-	-	-	-
HEXAGONAL	-	14 x 0,75	22 x 1,5	25 x 1,5	-	-	-	-	-	-
STANDARD	-	-	22 x 1,5	25 x 1,5	32 x 1,5	40 x 1,5	50 x 1,5	64 x 2,0	70 x 1,5	110 x 1,5

ASSEMBLING OF COLLETS IN ER NUTS

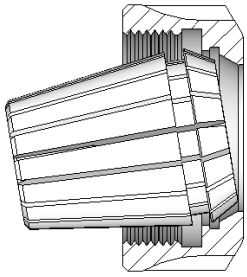

Fig. 1

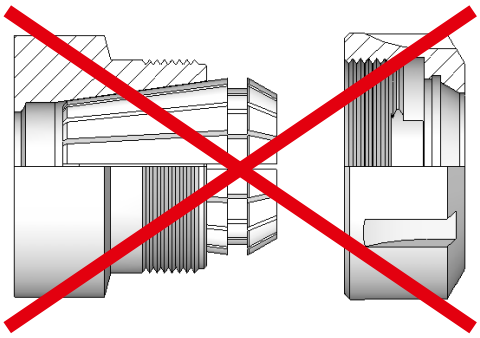

Fig. 2

RIGHT PROCEDURE TO ASSEMBLE THE COLLET IN THE NUT

A) Insert the collet into the nut inclining it untill the collet groove matches with nut excentric seat (picture 1).

B) Once the collet has been mounted in the nut (point A), screw the assembly on the spindle.

C) After insert the tool into the collet, is suggested to use the suitable wrench to complete the tightening.

WRONG PROCEDURE TO ASSEMBLE THE COLLET IN THE NUT

D) Inserting the collet into the spindle seat without first assembling it with the nut (picture 2) irremediably compromises the whole integrity :

- excentric in the nut breaks because of the pressure made by the collet. Such a breakage will not permit anymore the extraction of the collet that then will stay locked in its seat.
- during the nut screwing, broken excentric residuals cause scrapeson conic grindedpart of the collet compromising the exact matching.

ER CLAMPING NUTS MINI TYPE

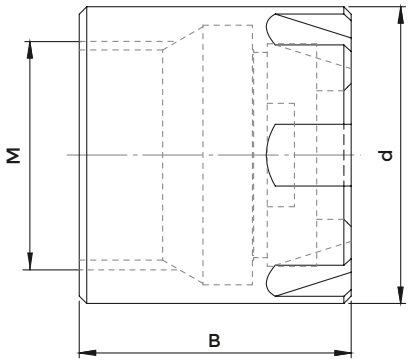

DIN 6499

RIGHT THREAD

COD.	DESCRIPTION	d	B	M	COLLET	WRENCH
0373	GM 8	12	11	10 x 0,75	ER8	816-203007
0432	GM 11	16	12	13 x 0,75	ER11	816-203008
1229	GM 16	22	18	19 x 1,00	ER16	816-203009
1230	GM 20	28	19	24 x 1,00	ER20	816-203010
1231	GM 25	35	20	30 x 1,00	ER25	816-203011

LEFT THREAD

COD.	DESCRIPTION	d	B	M	COLLET	WRENCH
1188	GM 8 L	12	10	10 x 0,75 SX	ER8	816-203007
1189	GM 11 L	16	12	13 x 0,75 SX	ER11	816-203008
1233	GM 16 L	22	18	19 x 1,00 SX	ER16	816-203009
1234	GM 20 L	28	19	24 x 1,00 SX	ER20	816-203010
1235	GM 25 L	35	20	30 x 1,00 SX	ER25	816-203011

ER CLAMPING NUTS MINI TYPE

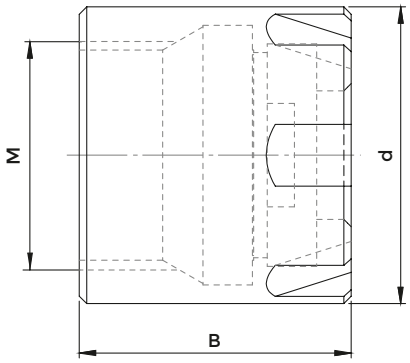

DIN 6499

GROUND OUTSIDE - RIGHT THREAD

COD.	DESCRIPTION	d	B	M	COLLET	WRENCH
812-203011	GM 8 W	12	10	10 x 0,75	ER8	816-203007
812-203012	GM 11 W	16	12	13 x 0,75	ER11	816-203008
812-203013	GM 16 W	22	18	19 x 1,00	ER16	816-203009
812-203014	GM 20 W	28	19	24 x 1,00	ER20	816-203010
812-203015	GM 25 W	35	20	30 x 1,00	ER25	816-203011

ER CLAMPING NUTS HEXAGONAL TYPE

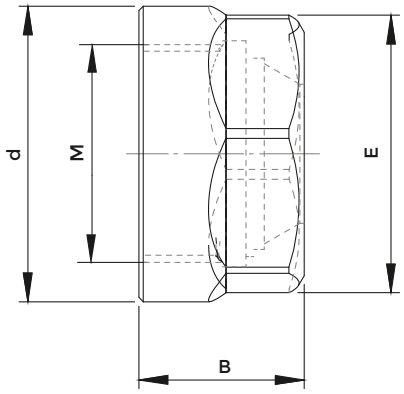

DIN 6499

RIGHT THREAD

COD.	DESCRIPTION	d	E	B	M	COLLET	WRENCH
812-203008	GE 11	19	17	11,3	14 x 0,75	ER11	2905
0342	GE 12	19	17	14	14 x 0,75	ER12	2905
812-203009	GE 16	28	25	17,5	22 x 1,50	ER16	816-203012
812-203010	GE 20	34	30	19	25 x 1,50	ER20	816-203013

ER CLAMPING NUTS STANDARD TYPE

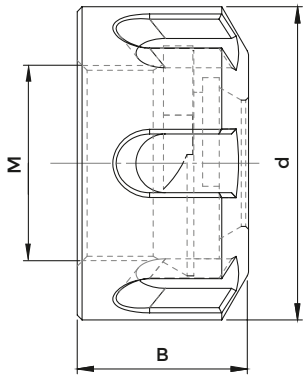

DIN 6499

RIGHT THREAD

COD.	DESCRIPTION	d	B	M	COLLET	WRENCH
812-203005	GS 16	32	17,5	22 x 1,5	ER16	816-203000
812-203006	GS 20	35	19	25 x 1,5	ER20	816-203005
812-203001	GS 25	42	20	32 x 1,5	ER25	816-203001
812-203002	GS 32	50	22,5	40 x 1,5	ER32	816-203002
812-203003	GS 40	63	25,5	50 x 1,5	ER40	816-203003
812-203007	GS 50	78	35,5	64 x 2,0	ER50	816-203004

LEFT THREAD

COD.	DESCRIPTION	d	B	M	COLLET	WRENCH
812-203000	GS 16 L	32	17,5	22 x 1,5 SX	ER16	816-203000
3072	GS 20 L	35	19	25 x 1,5 SX	ER20	816-203005
812-203033	GS 25 L	42	20	32 x 1,5 SX	ER25	816-203001
812-203035	GS 32 L	50	22,5	40 x 1,5 SX	ER32	816-203002
812-203034	GS 40 L	63	25,5	50 x 1,5 SX	ER40	816-203003

ER CLAMPING NUTS STANDARD TYPE - BALL BEARING EXECUTION

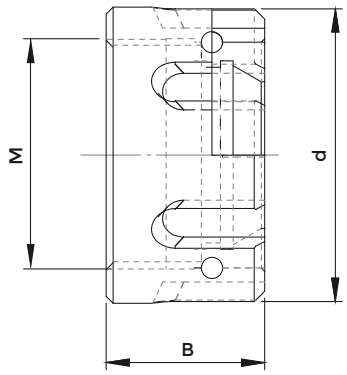

DIN 6499

RIGHT THREAD

COD.	DESCRIPTION	d	B	M	COLLET	WRENCH
2713	GS 16 B	32	20	22 x 1,5	ER16	816-203000
2714	GS 20 B	35	22	25 x 1,5	ER20	816-203005
2715	GS 25 B	42	22,5	32 x 1,5	ER25	816-203001
2716	GS 32 B	50	25	40 x 1,5	ER32	816-203002
2717	GS 40 B	63	28	50 x 1,5	ER40	816-203003
2913	GS 50 B	78	40	64 x 2,0	ER50	816-203004
5714	GS 60 B	83	36	70 x 1,5	ER60	-

CHARACTERISTICS AND ADVANTAGES

- Collet clamping force is increased.
- Avoids collet torsion reducing friction with its seat and consequently preserves its accuracy.
- Interchangeable with standard and hexagonal nuts.

ER CLAMPING NUTS WITH OUTSIDE THREAD - "GA" TYPE

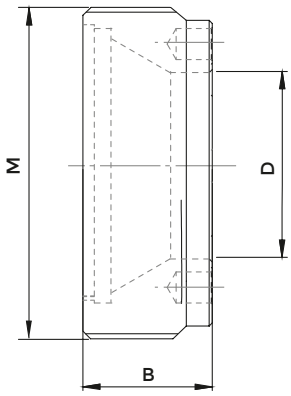

DIN 6499

COD.	DESCRIPTION	B	M	D	COLLET	WRENCH
2867	GA 11	6,0	18 x 1,0	9	ER11	CH-3169
2868	GA 16	8,0	24 x 1,0	12,8	ER16	CHER16EX
2869	GA 20	11,0	28 x 1,5	16	ER20	3171
812-203057	GA 25	12,5	32 x 1,5	18	ER25	CHER25EX
812-203032	GA 32	14,00	40 x 1,5	25,5	ER32	CHER32EX

WRENCHES FOR "GA" TYPE CLAMPING NUTS

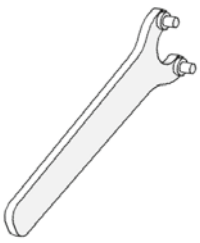

COD.	DESCRIPTION	NUT
CH-3169	CH ER 11 GA	2867
CHER16EX	CH ER 16 GA	2868
3171	CH ER 20 GA	2869
CHER25EX	CH ER 25 GA	812-203057
CHER32EX	CH ER 32 GA	812-203032

ER CLAMPING NUTS "GA-E" TYPE WITH OUTSIDE THREAD - HEXAGONAL HOLD

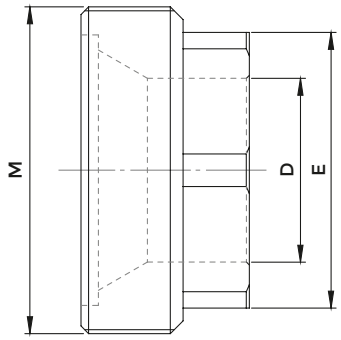

DIN 6499

COD.	DESCRIPTION	E	B	M	D	COLLET	WRENCH
2601	GA 11 E	13	10	18 x 1,0	9	ER11	5491
2606	GA 16 E	19	11	24 x 1,0	12,8	ER16	5492
2610	GA 20 E	22	14	28 x 1,5	16	ER20	5493
2611	GA 25 E	27	14	32 x 1,5	20,5	ER25	5494
2612	GA 32 E	32	17,5	40 x 1,5	25,5	ER32	5495
2613	GA 40 E	42	17,1	50 x 1,5	34	ER40	5496

WRENCHES FOR "GA-E" TYPE CLAMPING NUTS

COD.	DESCRIPTION	NUT
5491	CH ER 11 GA-E	2601
5492	CH ER 16 GA-E	2606
5493	CH ER 20 GA-E	2610
5494	CH ER 25 GA-E	2611
5495	CH ER 32 GA-E	2612
5496	CH ER 40 GA-E	2613

ER WRENCHES FOR MINI CLAMPING NUTS

DIN 6499

COD.	DESCRIPTION	Ø	NUT
816-203007	CH 8 Mini	12	0373
816-203008	CH 11 Mini	16	0432
816-203009	CH 16 Mini	22	1229
816-203010	CH 20 Mini	28	1230
816-203011	CH 25 Mini	35	1231

ER WRENCHES FOR EXAGONAL CLAMPING NUTS

DIN 6499

COD.	DESCRIPTION	E	NUT
2905	CH 11 CE	17	812-203008
2905	CH 12 CE	17	0342
816-203012	CH 16 CE	25	812-203009
816-203013	CH 20 CE	30	812-203010

ER WRENCHES FOR STANDARD CLAMPING NUTS

DIN 6499

COD.	DESCRIPTION	Ø	NUT
816-203000	CH 16 ST	32	812-203005
816-203005	CH 20 ST	35	812-203006
816-203001	CH 25 ST	42	812-203001
816-203002	CH 32 ST	50	812-203002
816-203003	CH 40 ST	63	812-203003
816-203004	CH 50 ST	78	812-203007

ER WRENCHES FOR SIDE GRIP CLAMPING NUTS

DIN 6499

COD.	DESCRIPTION	Ø	NUT
G2880	CH ER 11 GT - CH 6 GOC	20	5090
2820	CH 8 GOC	26	GOC8
816-203031	CH ER 16 GT - CH 10 GOC	32	812-203069
816-203035	CH ER 20 GT- CH 12 GOC	35	5092
816-203032	CH ER 25 GT- CH 16 GOC	42	812-203070
816-203033	CH ER 32 GT- CH 20 GOC	50	812-203071
816-203034	CH ER 40 GT- CH 25 GOC	63	812-203072
816-203036	CH EOC 32 PC CH 32 GOC	72	GOC32
2836	CH 40 GOC	85	GOC40

ER TORQUE WRENCHES FOR MINI CLAMPING NUTS

DIN 6499

COD.	DESCRIPTION	TORQUE	Ø	NUT
9786	CD 8 Mini	8 Nm	12	0373
9787	CD 11 Mini	18 Nm	16	0432
9788	CD 16 Mini	28 Nm	22	1229
9789	CD 20 Mini	35 Nm	28	1230
9790	CD 25 Mini	40 Nm	35	1231

ER TORQUE WRENCHES FOR HEXAGONAL CLAMPING NUTS

DIN 6499

COD.	DESCRIPTION	TORQUE		E	NUT
9791	CD 11 CE	20 Nm		17	812-203008
9791	CD 12 CE	20 Nm		17	0342
9792	CD 16 CE	30 Nm	50 Nm	25	812-203009
9793	CD 20 CE	40 Nm	70 Nm	30	812-203010

ER TORQUE WRENCHES FOR STANDARD CLAMPING NUTS

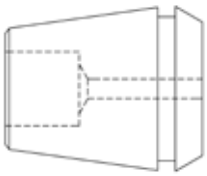

For wrought collets, select MINIMUM Torque

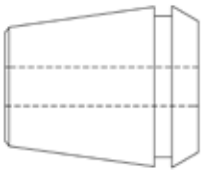

For normal collets, select MAXIMUM Torque

DIN 6499

COD.	DESCRIPTION	TORQUE		Ø	NUT
9794	CD 16 ST	30 Nm	50 Nm	32	812-203005
9795	CD 20 ST	40 Nm	70 Nm	35	812-203006
9796	CD 25 ST	55 Nm	90 Nm	42	812-203001
9797	CD 32 ST	70 Nm	130 Nm	50	812-203002
9798	CD 40 ST	120 Nm	200 Nm	63	812-203003

DIN 69872 PULL STUDS WITHOUT COOLANT BORE (ISO 7388-3 form AD - AF)

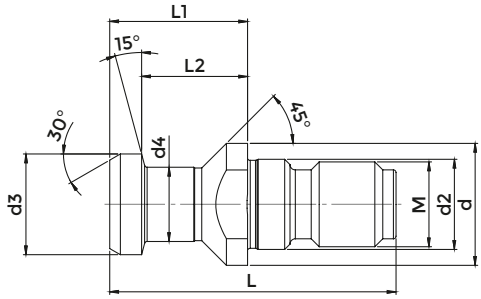

DIN 69872

COD. (WITHOUT OR)	COD. (WITH OR)	DESCRIPTION	M	d	d2	d3	d4	L	L1	L2
217-21206	-	69872 ISO 30 - NON FORATO	M 12	17	13	13	9	44	24	19
217-21207	217-21301	69872 ISO 40 - NON FORATO	M 16	23	17	19	14	54	26	20
217-22380	-	69872 ISO 45 - NON FORATO	M 20	30	21	23	17	65	30	23
217-21208	217-21302	69872 ISO 50 - NON FORATO	M 24	36	25	28	21	74	34	25

DIN 69872 PULL STUDS WITH COOLANT BORE (ISO 7388-3 form AD - AF)

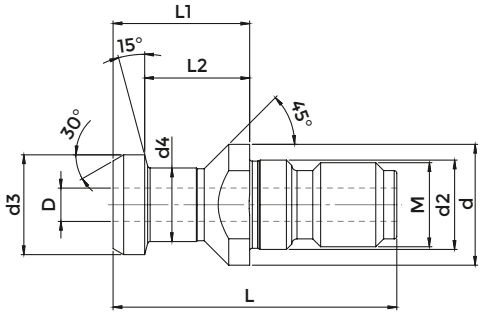

DIN 69872

COD. (WITHOUT OR)	COD. (WITH OR)	DESCRIPTION	M	d	d2	d3	d4	L	L1	L2	D
217-21203	-	69872 ISO 30 - FORATO	M 12	17	13	13	9	44	24	19	3
217-21201	217-21305	69872 ISO 40 - FORATO	M16	23	17	19	14	54	26	20	7
-	611-2033-02	69872 ISO 40 - OKUMA	M 16	23	17	19	14	54	26	20	4
217-22371	-	69872 ISO 45 - FORATO	M 20	30	21	23	17	65	30	23	9,5
217-21202	217-21306	69872 ISO 50 - FORATO	M 24	36	25	28	21	74	34	25	11,5

DIN 69872 PULL STUDS WITH COOLANT BORE AND DOUBLE O-RING (ISO 7388-3 form AD - AF)

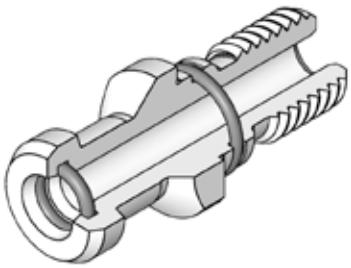

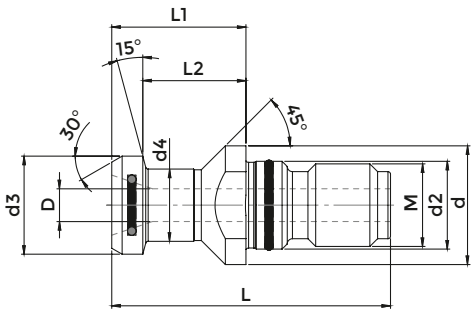

DIN 69872

COD.	DESCRIPTION	M	d	d2	d3	d4	L	L1	L2	D
217-21307	69872 ISO 40 - FORATO con DOPPIO OR	M 16	23	17	19	14	54	26	20	7
217-21309	69872 ISO 50 - FORATO con DOPPIO OR	M 24	36	25	28	21	74	34	25	11,5

DIN 69872 TYPE PULL STUDS SUITABLE FOR BT SHANKS WITHOUT COOLANT BORE

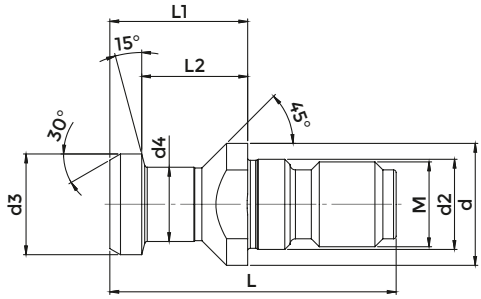

DIN 69872

COD. (WITHOUT OR)	COD. (WITH OR)	DESCRIPTION	M	d	d2	d3	d4	L	L1	L2
217-22364	217-22365	69872 / BT 40 - NON FORATO	M16	23	17	19	14	54	29	23

DIN 69872 TYPE PULL STUDS SUITABLE FOR BT SHANKS WITH COOLANT BORE

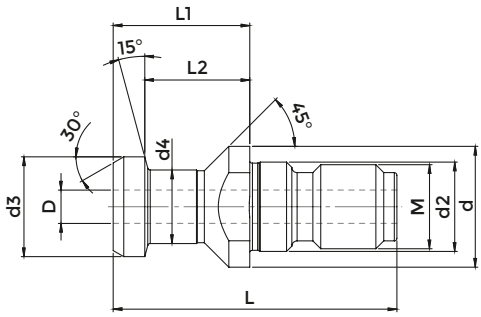

DIN 69872

COD. (WITHOUT OR)	COD. (WITH OR)	DESCRIPTION	M	d	d2	d3	d4	L	L1	L2	D
217-22366	217-22367	69872 / BT 40 - FORATO	M16	23	17	19	14	54	29	23	7

DIN 69872 TYPE PULL STUDS SUITABLE FOR BT SHANKS WITH COOLANT BORE AND DOUBLE O-RING

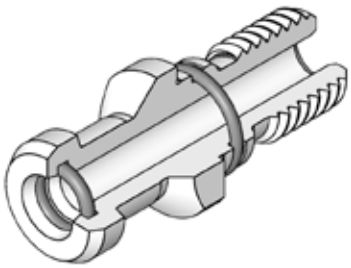

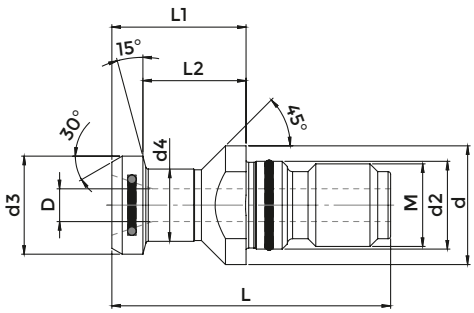

DIN 69872

COD.	DESCRIPTION	M	d	d2	d3	d4	L	L1	L2	D
217-21308	69872 / BT 40 - FORATO con DOPPIO OR	M16	23	17	19	14	54	29	23	7

ISO 7388/2 A PULL STUDS WITHOUT COOLANT BORE

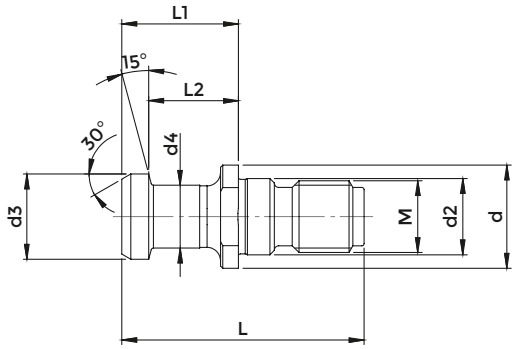

ISO 7388/A

COD. (WITHOUT OR)	COD. (WITH OR)	DESCRIPTION	M	d	d2	d3	d4	L	L1	L2
217-21613	-	7388/2A ISO30 - NON FORATO	M 12	16	13	12	8	44	24	19
217-21617	217-21619	7388/2A ISO40 - NON FORATO	M 16	23	17	19	14	54	26	20
217-22381	-	7388/2A ISO45 - NON FORATO	M 20	30	21	23	17	65	30	23
217-21618	217-21620	7388/2A ISO50 - NON FORATO	M 24	36	25	28	21	74	34	25

ISO 7388/2 A PULL STUDS WITH COOLANT BORE

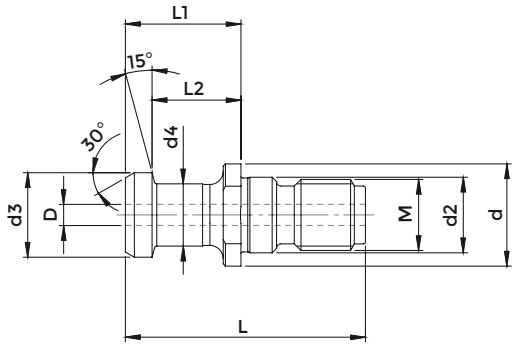

ISO 7388/A

COD. (WITHOUT OR)	COD. (WITH OR)	DESCRIPTION	M	d	d2	d3	d4	L	L1	L2	D
217-21614	217-21623	7388/2A ISO40 - FORATO	M 16	23	17	19	14	54	26	20	7
217-22372	-	7388/2A ISO45 - FORATO	M 20	30	21	23	17	65	30	23	9,5
217-21615	217-21624	7388/2A ISO50 - FORATO	M 24	36	25	28	21	74	34	25	11,5

ISO 7388/2 A PULL STUDS WITH ID COUNTERBORE

ISO 7388/A

ID counterbore is carried out upon customer specification

ISO 7388/2 B PULL STUDS (ISO 7388-3 form UD - UF) WITHOUT COOLANT BORE

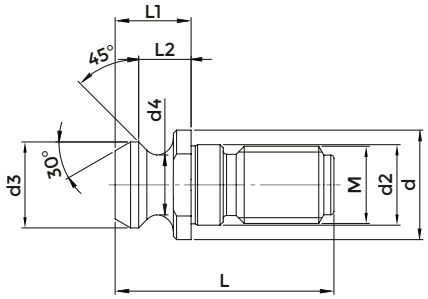

ISO 7388/B

COD. (WITHOUT OR)	COD. (WITH OR)	DESCRIPTION	M	d	d2	d3	d4	L	L1	L2
217-21603	-	7388/2B ISO30 - NON FORATO	M 12	17	12,5	13,3	9,3	34	11,8	8,1
217-21608	217-21611	7388/2B ISO40 - NON FORATO	M 16	22,5	17	18,9	12,9	44,5	16,4	11,1
217-22382	-	7388/2B ISO45 - NON FORATO	M 20	30	21	24	16,3	56	20,9	14,8
217-21609	217-21612	7388/2B ISO50 - NON FORATO	M 24	37	25	29,1	19,6	65,5	25,5	17,9

ISO 7388/2 B PULL STUDS (ISO 7388-3 form UD - UF) WITH COOLANT BORE

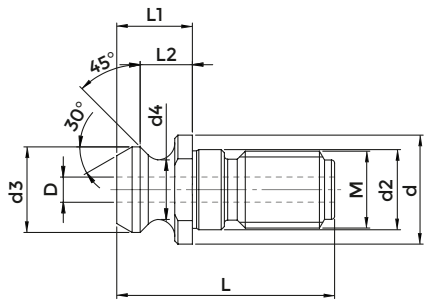

ISO 7388/B

COD. (WITHOUT OR)	COD. (WITH OR)	DESCRIPTION	M	d	d2	d3	d4	L	L1	L2	D
217-21601	217-21621	7388/2B ISO40 - FORATO	M 16	22,5	17	18,9	12,9	44,5	16,4	11,1	7,3
217-22373	-	7388/2B ISO45 - FORATO	M 20	30	21	24	16,3	56	20,9	14,8	9,2
217-21602	217-21622	7388/2B ISO50 - FORATO	M 24	37	25	29,1	19,6	65,5	25,5	17,9	11,5

ISO 7388/2 B PULL STUDS (ISO 7388-3 form UD - UF) WITH ID COUNTERBORE

ISO 7388/B

ID counterbore is carried out upon customer specification

BT PULL STUDS (ISO 7388-3 form JD - JF) WITHOUT COOLANT BORE

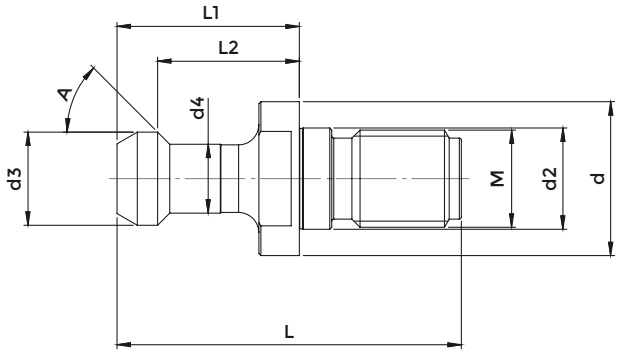

MAS BT

COD. (WITHOUT OR)	COD. (WITH OR)	DESCRIPTION	A	M	d	d2	d3	d4	L	L1	L2
217-21507	-	BT 30 - 45° NON FORATO	45 °	M 12	16,5	12,5	11	7	43	23	18
217-21508	-	BT 30 - 60° NON FORATO	60°	M 12	16,5	12,5	11	7	43	23	18
217-21509	-	BT 35 - 45° NON FORATO	45°	M 12	20	13	13	8,5	48	28	22,5
217-21501	217-21402	BT 40 - 45° NON FORATO	45°	M 16	23	17	15	10	60	35	28
217-21502	217-21401	BT 40 - 60° NON FORATO	60°	M 16	23	17	15	10	60	35	28
217-21503	217-21403	BT 40 - 90° NON FORATO	90°	M 16	23	17	15	10	60	35	28
3297	-	BT 45 - 45° NON FORATO	45°	M 20	31	21	19	14	70	40	31
3298	-	BT 45 - 60° NON FORATO	60°	M 20	31	21	19	14	70	40	31
217-21504	217-21405	BT 50 - 45° NON FORATO	45°	M 24	38	25	23	17	85	45	35
217-21505	217-21404	BT 50 - 60° NON FORATO	60°	M 24	38	25	23	17	85	45	35
217-21506	217-21406	BT 50 - 90° NON FORATO	90°	M 24	38	25	23	17	85	45	35

BT PULL STUDS (ISO 7388-3 form JD - JF) WITH COOLANT BORE

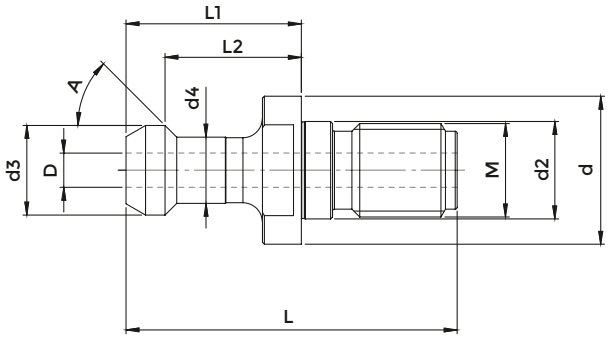

MAS BT

COD. (WITHOUT OR)	COD. (WITH OR)	DESCRIPTION	A	M	d	d2	d3	d4	L	L1	L2	D
217-21507SP	-	BT 30 - 45° FORATO	45°	M 12	16,5	12,5	11	7	43	23	18	2,5
217-21508-FOR	-	BT 30 - 60° FORATO	60°	M 12	16,5	12,5	11	7	43	23	18	2,5
217-22207	217-22317	BT 40 - 45° FORATO	45°	M 16	23	17	15	10	60	35	28	4
217-22206	217-22316	BT 40 - 60° FORATO	60°	M 16	23	17	15	10	60	35	28	4
217-22208	217-22318	BT 40 - 90° FORATO	90°	M 16	23	17	15	10	60	35	28	4
217-22210	217-22320	BT 50 - 45° FORATO	45°	M 24	38	25	23	17	85	45	35	6
217-22209	217-22319	BT 50 - 60° FORATO	60°	M 24	38	25	23	17	85	45	35	6
217-22211	217-22321	BT 50 - 90° FORATO	90°	M 24	38	25	23	17	85	45	35	6

BT PULL STUDS WITH COOLANT BORE AND DOUBLE O-RING

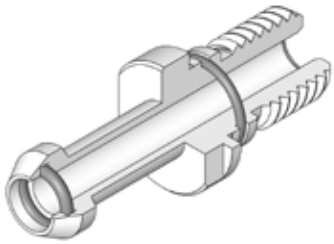

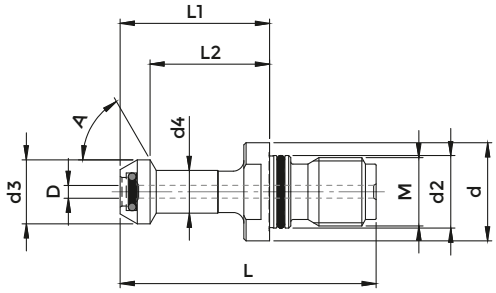

MAS BT

COD.	DESCRIPTION	A	M	d	d2	d3	d4	L	L1	L2	D
217-22362	BT 40 - 45° FORATO con DOPPIO OR	45°	M 16	23	17	15	10	60	35	28	3
217-22363	BT 40 - 60° FORATO con DOPPIO OR	60°	M 16	23	17	15	10	60	35	28	3
217-21412	BT 50 - 45° FORATO con DOPPIO OR	45°	M 24	38	25	23	17	85	45	35	6
217-21413	BT 50 - 60° FORATO con DOPPIO OR	60°	M 24	38	25	23	17	85	45	35	6
217-21414	BT 50 - 90° FORATO con DOPPIO OR	90°	M 24	38	25	23	17	85	45	35	6

BT TYPE PULL STUDS SUITABLE FOR DIN 69871 SHANKS WITHOUT COOLANT BORE

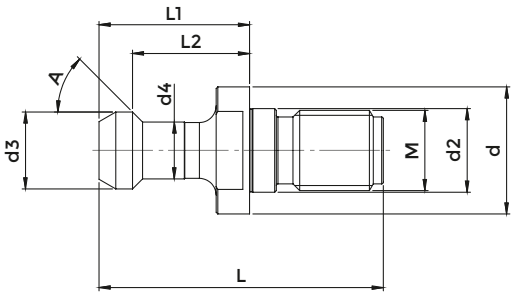

DIN 69871

COD. (WITHOUT OR)	COD. (WITH OR)	DESCRIPTION	A	M	d	d2	d3	d4	L	L1	L2
217-22090	217-21408	SK 40 - 45° NON FORATO	45°	M 16	23	17	15	10	57	32	25
-	4631	SK 40 - 60° NON FORATO	60°	M 16	23	17	15	10	57	32	25
217-22027	217-21409	SK 40 - 90° NON FORATO	90°	M 16	23	17	15	10	57	32	25

BT TYPE PULL STUDS SUITABLE FOR DIN 69871 SHANKS WITH COOLANT BORE

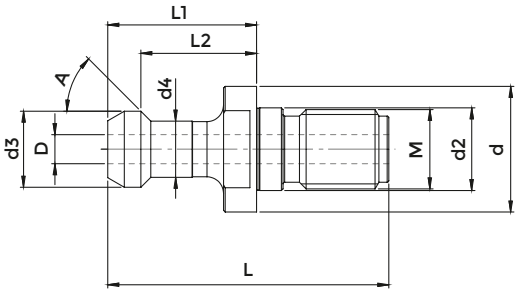

DIN 69871

COD. (WITHOUT OR)	COD. (WITH OR)	DESCRIPTION	A	M	d	d2	d3	d4	L	L1	L2	D
217-22213	217-22323	SK 40 - 45° FORATO	45°	M 16	23	17	15	10	57	32	25	4
-	217-22322	SK 40 - 60° FORATO	60°	M 16	23	17	15	10	57	32	25	4
-	217-22324	SK 40 - 90° FORATO	90°	M 16	23	17	15	10	57	32	25	4

JIS B 6339 PULL STUDS WITH COOLANT BORE

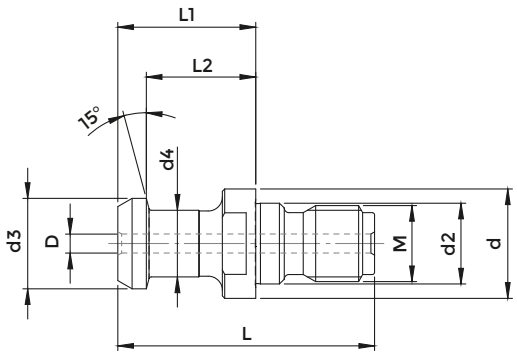

JIS B 6339

COD. (WITHOUT OR)	COD. (WITH OR)	DESCRIPTION	M	d	d2	d3	d4	L	L1	L2	D
217-22325	-	6339 ISO 30 - FORATO	M 12	16,5	12,5	12	8	43	23,4	18,4	4
217-22361	217-22326	6339 ISO 40 - FORATO	M 16	23	17	19	14	54	29	23	4
217-22134	217-22327	6339 ISO 40 - FORATO	M 16	23	17	19	14	54	29	23	7
-	217-22328	6339 ISO 50 - FORATO	M 24	38	25	28	21	74	34	25	10

JIS B 6339 PULL STUDS WITH COOLANT BORE AND GRINDED HEAD

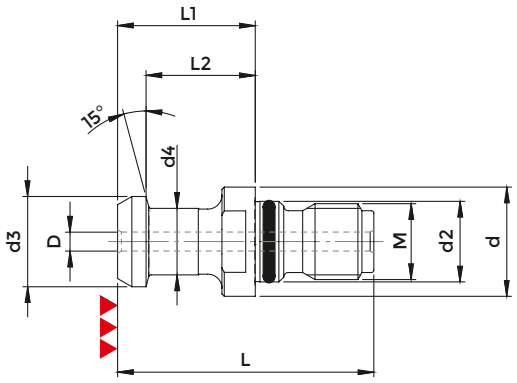

JIS B 6339

COD.	DESCRIPTION	M	d	d2	d3	d4	L	L1	L2	D
611-2031-01	6339 ISO 40 FORATO con RASAMENTO RETTIFICATO	M 16	23	17	19	14	54	29	23	4

PULL STUDS FOR ISO 20 SHANK

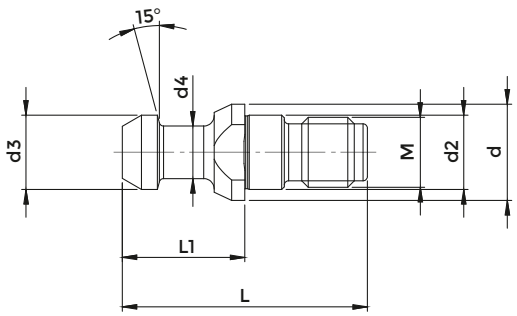

ISO 20

COD.	DESCRIPTION	M	d	d2	d3	d4	L	L1
217-22374	ISO 20 - M 8 / L 28	M 8	11	8,5	8,5	6	28	14

OTT PULL STUDS ADAPTERS TO DIN 2080

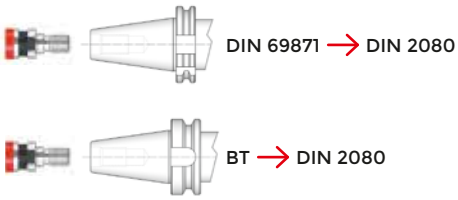

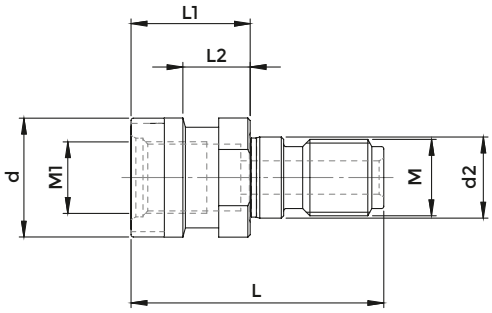

OTT

COD.	DESCRIPTION	M	M1	d	d2	L	L1	L2
217-22025	OTT M 16 - TC 40	M 16	M 16	25,3	17	53	25	13,6
217-22040	OTT M 16 - BT 40	M 16	M 16	25,3	17	56	28	16,6
217-22024	OTT M 24 - CONO 50	M 24	M 24	39,6	25	65	25	13

BIESSE PULL STUDS

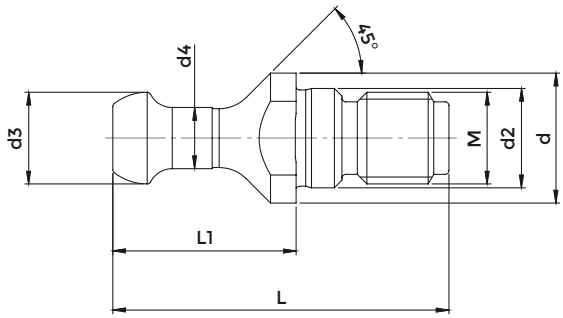

BIESSE

COD.	DESCRIPTION	M	d	d2	d3	d4	L	L1
217-22158	BIESSE ISO 30 - M 12	M 12	17	13	12	8	44	24

BRIDGEPORT PULL STUDS

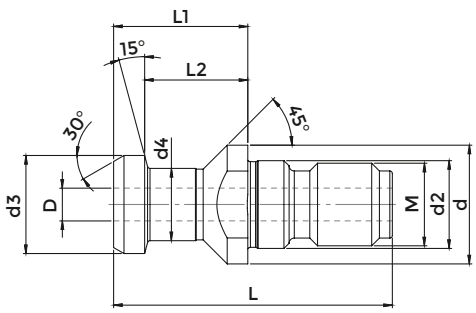

BRIDGEPORT

COD.	DESCRIPTION	M	d	d2	d3	d4	L	L1	L2	D
217-22253	BRIDGEPORT ISO 40 - M 16	M 16	23	17	19	14	54	29	23	7

C.B. FERRARI PULL STUDS

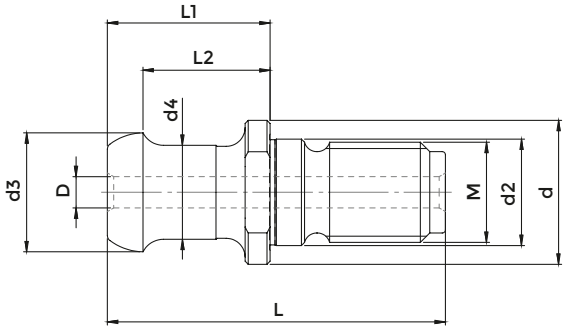

C.B. FERRARI

COD.	DESCRIPTION	M	d	d2	d3	d4	L	L1	L2	D
217-22017	C.B. FERRARI ISO40 - M16	M 16	23	17	19	15	54	26	20,31	5

C.B. FERRARI PULL STUDS WITH NUT

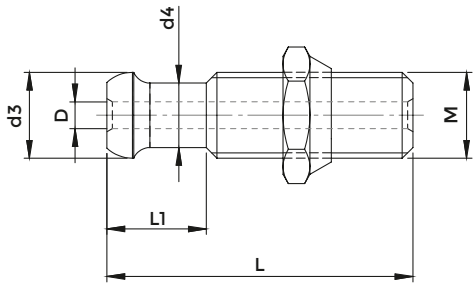

C.B. FERRARI

COD.	DESCRIPTION	M	d3	d4	L	L1	D
217-22046	C.B. FERRARI ISO40 - M16/DADO	M 16	16	12	57	18,5	5

CHIRON PULL STUDS

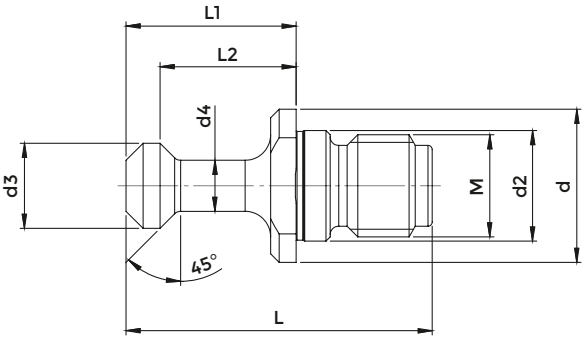

CHIRON

COD.	DESCRIPTION	M	d	d2	d3	d4	L	L1	L2
217-22048	CHIRON ISO 30 - M 12	M 12	18	13	10	6	36	20	16

CINCINNATI PULL STUDS

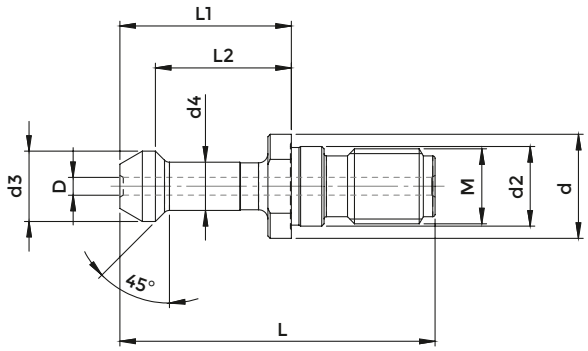

CINCINNATI

COD.	DESCRIPTION	M	L	L1	L2	d	d2	d3	d4	D
217-22030	CINCINNATI ISO 40 - M16 / L1=36,6	M 16	67,3	36,6	29	22,2	17	15	10,3	3,8
217-22010	CINCINNATI ISO 40 - M16 / L1=39,4	M 16	67,3	39,4	31,75	22,2	17	15	10,3	3,8

CORREA PULL STUD BOLTS

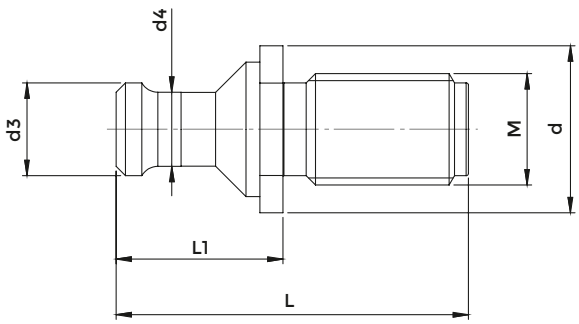

CORREA

COD.	DESCRIPTION	M	d	d3	d4	L	L1
217-22135	CORREA ISO 50 - M 24	M 24	36	20	16	76	36

MECCANICA CORTINI PULL STUDS

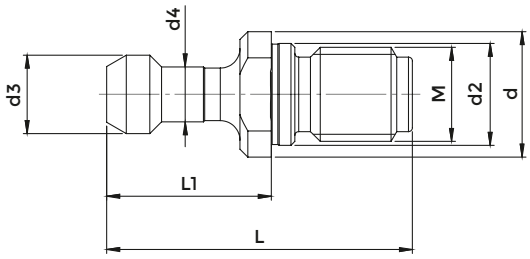

CORTINI

COD.	DESCRIPTION	M	d	d2	d3	d4	L	L1
217-22254	CORTINI ISO 30 - M 12	M 12	16	13	10	7	39	21

FAMUP PULL STUDS

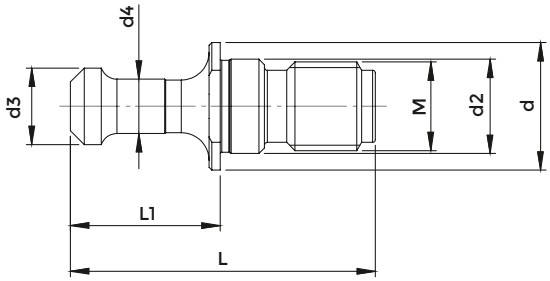

FAMUP

COD.	DESCRIPTION	M	d	d2	d3	d4	L	L1
217-22137	FAMUP ISO 30 - M12	M 12	16	13	9,8	5,8	40	20
217-22051	FAMUP ISO 40 - M16 / L=55	M 16	23	17	13,8	9,8	55	27
217-22052	FAMUP ISO 40 - M16 / L=58	M 16	23	17	13,8	9,8	58	30

GLORIA PULL STUDS

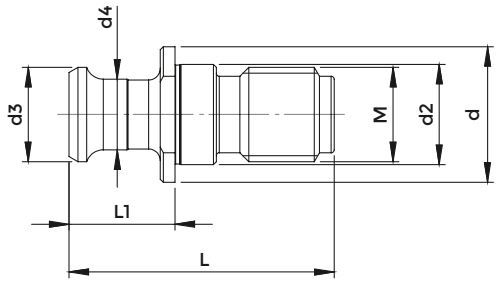

GLORIA

COD.	DESCRIPTION	M	d	d2	d3	d4	L	L1
217-22370	GLORIA ISO 40 - M 16	M 16	23	17	16	12	45	18

MAZAK PULL STUDS WITHOUT COOLANT BORE

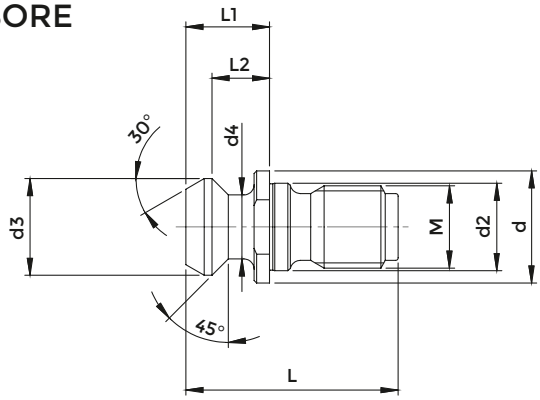

MAZAK

COD. (WITHOUT OR)	COD. (WITH OR)	DESCRIPTION	M	d	d2	d3	d4	L	L1	L2	
217-22375	217-22376	MAZAK SK 40 - NON FORATO	M 16	21,8	17	18,79	12,44	41,25	16,25	11,17	DIN 69871/ CAT
217-22377	217-22378	MAZAK BT 40 - NON FORATO	M 16	22	17	18,79	12,44	44,1	19,1	14,02	BT

MAZAK PULL STUDS WITH COOLANT BORE

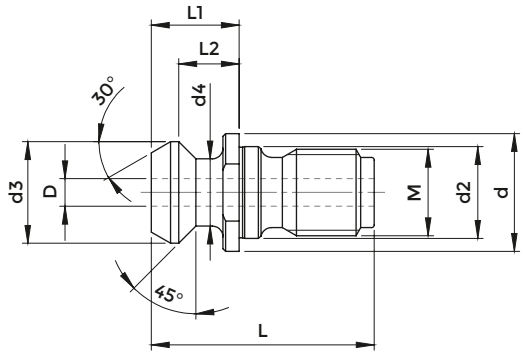

MAZAK

COD. (WITHOUT OR)	COD. (WITH OR)	DESCRIPTION	M	d	d2	d3	d4	L	L1	L2	D	
217-22003	217-22313	MAZAK SK 40 - FORATO	M16	21,8	17	18,79	12,44	41,25	16,25	11,17	7	DIN 69871/ CAT
217-22047	217-22314	MAZAK BT 40 - FORATO	M16	22	17	18,79	12,44	44,1	19,1	14,02	7	BT
217-22383	217-22384	MAZAK SK 50 - FORATO	M24	35,5	25	28,95	20,82	65,4	25,4	17,78	10	DIN 69871/ CAT
217-22356	217-22358	MAZAK BT 50 - FORATO	M24	37	25	28,95	20,82	65,2	25,2	17,58	10	BT

MAZAK PULL STUDS WITH COOLANT BORE AND COUNTERBORE

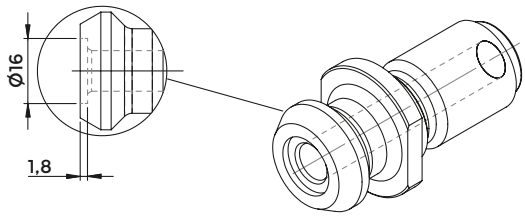

MAZAK

COD. (WITHOUT OR)	COD. (WITH OR)	DESCRIPTION	M	d	d2	d3	d4	L	L1	L2	D	
217-22187	217-22315	MAZAK SK 50 con LAMATURA	M24	35,5	25	28,95	20,82	65,4	25,4	17,78	10	DIN 69871 / CAT
217-22355	217-22357	MAZAK BT 50 con LAMATURA	M24	37	25	28,95	20,82	65,2	25,2	17,58	10	BT

OKUMA PULL STUDS (FOR DIN) WITH COOLANT BORE AND GRINDED HEAD

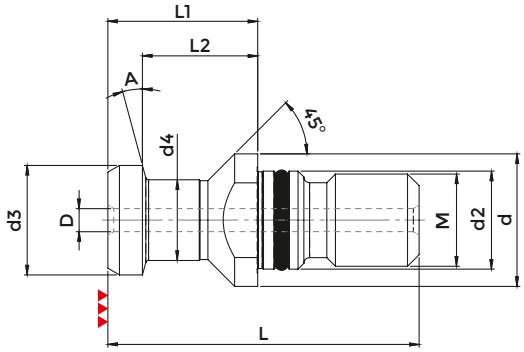

OKUMA

COD.	DESCRIPTION	M	d	d2	d3	d4	L	L1	L2	D	A
611-2033-02	OKUMA SK 40 - FORATO	M 16	23	17	19	14	54	26	20	4	15°

OKUMA PULL STUDS (FOR BT) WITH COOLANT BORE AND GRINDED HEAD

FIG. 1

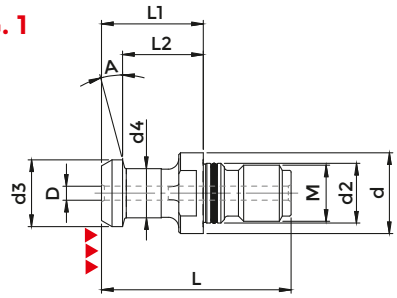

FIG. 2

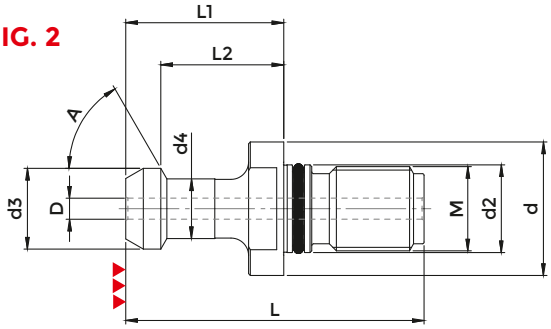

OKUMA

COD.	DESCRIPTION	M	d	d2	d3	d4	L	L1	L2	D	A	FIG.
611-2031-01	OKUMA BT 40 - FORATO	M 16	23	17	19	14	54	29	23	4	15°	1
613-2030-33-03	OKUMA BT 50 - FORATO	M 24	38	25	23	17	85	45	35	6	60°	2

OLIVETTI OCN PULL STUDS

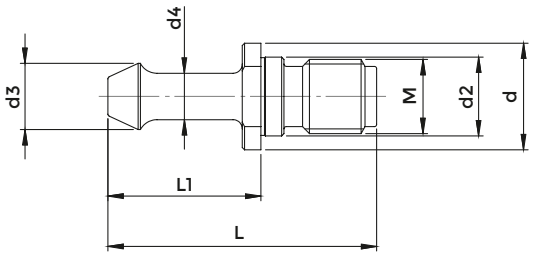

OLIVETTI OCN

COD.	DESCRIPTION	M	d	d2	d3	d4	L	L1
217-22136	OLIVETTI ISO 40 - M 16	M 16	23	17	14,3	10	58	33

RAMBAUDI PULL STUDS

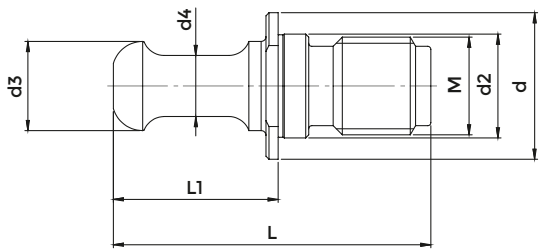

RAMBAUDI

COD.	DESCRIPTION	M	d	d2	d3	d4	L	L1
217-22049	RAMBAUDI ISO 40 - M 16	M 16	24	17	14,6	10	52	27
217-22050	RAMBAUDI ISO 50 - M 24	M 24	35,8	25	20	16	79,5	39,5

SCM / MORBIDELLI PULL STUDS

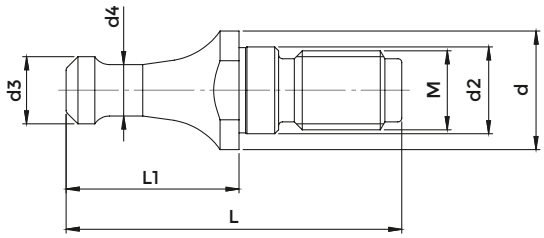

SCM MORBIDELLI

COD.	DESCRIPTION	M	d	d2	d3	d4	L	L1
217-22369	SCM/MORBIDELLI ISO 30 - M 10	M 10	15	11	8,5	6,5	42,5	21,9

SECMU PULL STUDS

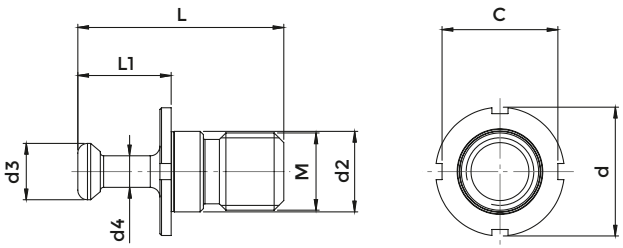

SECMU

COD.	DESCRIPTION	M	d	d2	d3	d4	L	L1	C
217-22138	SECMU ISO 50 - M 24	M 24	40	25	17,5	9,8	64	29	36

TAPPING ADAPTERS WITHOUT CLUTCH

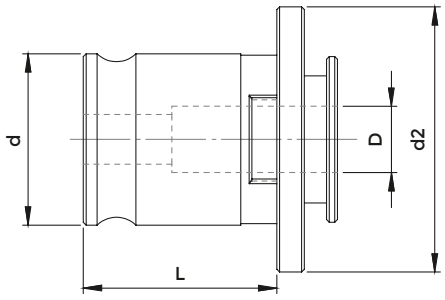

B

COD.	DESCRIPTION	THREAD	D	d	d2	L
4077	B.0	M 2 ÷ M 10	Ø 2,5 ÷ Ø 8	13	22	19,5
IBC1	B.1	M 2 ÷ M 12 (* M 18)	Ø 2,5 ÷ Ø 11 (* Ø 14)	19	30	21,5
IBC2	B.2	M 5 ÷ M 20 (* M 30)	Ø 6,0 ÷ Ø 18 (* Ø 22)	31	46	35
IBC3	B.3	M 14 ÷ M 36 (* M 48)	Ø11,0 ÷ Ø 28 (* Ø 36)	48	68	55,5

*Adapters with SCREWS

EQUIPMENT CASES FOR TAPPING CHUCKS OF TAPPING ADAPTERS WITHOUT CLUTCH

COD.	DESCRIPTION	CASE	SLEEVE
7532	Corredo B.1	3695	6 Bussole Art.3390: Ø 3,5 (M 3) - Ø 4,5 (M 4) - Ø 6 (M 6) - Ø 8 (M 8) - Ø 9 (M 12) - Ø 10 (M 10)
7533	Corredo B.2	3695	7 Bussole Art.3391: Ø 8 (M 8) - Ø 9 (M 12) - Ø 10 (M 10) - Ø 11 (M 14) - Ø 12 (M 16) - Ø 14 (M 18) - Ø 16 (M 20)

Is possible to complete the equipment adding the Tapping Chuck you are interested on.

TAPPING ADAPTERS WITHOUT CLUTCH WITH SCREWS

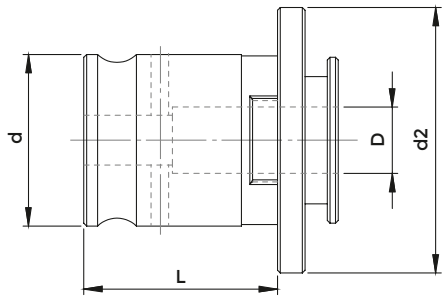

B-GR

COD.	DESCRIPTION	THREAD	D	d	d2	L
3390 GR	B.1 - GR	M 16 ÷ M 18	Ø 12 - Ø 14	19	30	21,5
3391 GR	B.2 - GR	M 27 ÷ M 30	Ø 20 - Ø 22	31	46	35
3392 GR	B.3 - GR	M 39 ÷ M 48	Ø 32 - Ø 36	48	68	55,5

On GR tapping adapters, the tapping tool is locked by screws on guide diameter, this makes possible bigger sizes clamping.

TAPPING ADAPTERS WITH CLUTCH

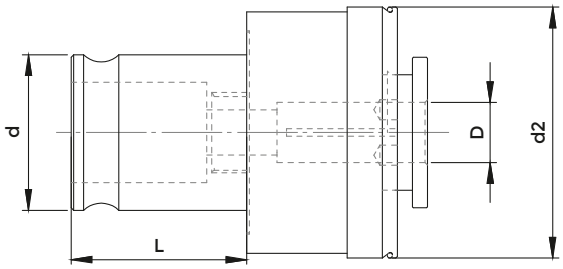

BF

COD.	DESCRIPTION	THREAD	D	d	d2	L
4078	BF.0	M 2 ÷ M 10	Ø 2,5 ÷ Ø 8	13	23	19,5
IBS1	BF.1	M 2 ÷ M 12 (* M 18)	Ø 2,5 ÷ Ø 12 (* Ø 14)	19	32	21,5
IBS2	BF.2	M 5 ÷ M 20 (* M 30)	Ø 6,0 ÷ Ø 18 (* Ø 22)	31	50	35
IBS3	BF.3	M 14 ÷ M 36 (* M 48)	Ø11,0 ÷ Ø 28 (* Ø 36)	48	72	55,5

*Adapters with SCREWS

EQUIPMENT CASES FOR TAPPING CHUCKS OF TAPPING ADAPTERS WITH CLUTCH

COD.	DESCRIPTION	CASE	SLEEVE
7534	Corredo B.1	3695	6 Bussole Art.3387: Ø 3,5 (M 3) - Ø 4,5 (M 4) - Ø 6 (M 6) - Ø 8 (M 8) - Ø 9 (M 12) - Ø 10 (M 10)
7535	Corredo B.2	3695	7 Bussole Art.3388: Ø 8 (M 8) - Ø 9 (M 12) - Ø 10 (M 10) - Ø 11 (M 14) - Ø 12 (M 16) - Ø 14 (M 18) - Ø 16 (M 20)

Is possible to complete the equipment adding the Tapping Chuck you are interested on.

TAPPING ADAPTERS WITH CLUTCH WITH SCREWS

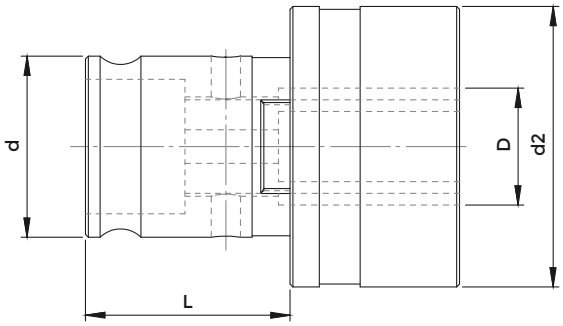

BF-GR

COD.	DESCRIPTION	THREAD	D	d	d2	L
3387 GR	BF.1 - GR	M 16 ÷ M 18	Ø 14	19	32	21,5
3388 GR	BF.2 - GR	M 27 ÷ M 30	Ø 20 - Ø 22	31	50	35
3389 GR	BF.3 - GR	M 39 ÷ M 48	Ø 32 - Ø 36	48	72	55,5

On GR tapping adapters, the tapping tool is locked by screws on guide diameter, this makes possible bigger sizes clamping.

REDUCTIONS FROM ADAPTER TO ADAPTER

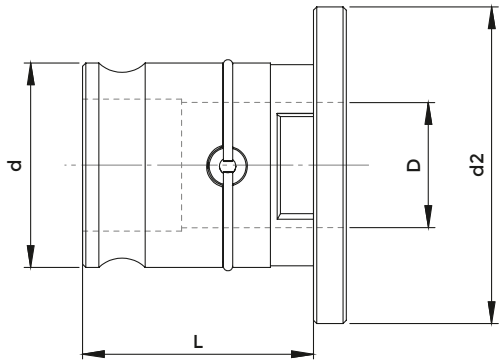

COD.	DESCRIPTION	d	D	d2	L
IBC1/0	B.1/B.0	19	13	30	21,5
IBC2/1	B.2/B.1	31	19	48	35
0397	B.3/B.1	48	19	70	55,5
IBC3/2	B.3/B.2	48	31	70	55,5

TAPPING ADAPTERS WITH ER COLLET

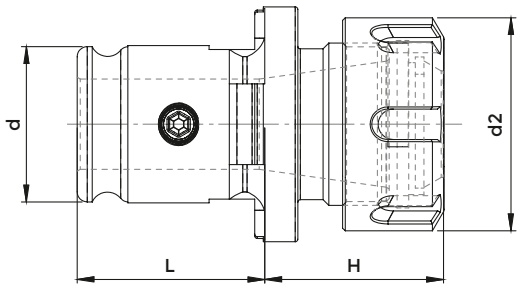

COD.	DESCRIPTION	ER	d	d2	H	L	NUT	WRENCH	COLLET
3385	B.1 - ER 16	ER 16 1÷12	19	32	29	21,5	4993	3698	0364
3386	B.2 - ER 25	ER 25 1÷20	31	42	38	35	4995	3669	0996
3160	B.2 - ER 32	ER 32 2÷25	31	50	62	35	4996	3670	0988

Tapping tool square is locked by the screws on guide diameter

ACCESSORIES

p. 617

THREADING DIE ADAPTERS

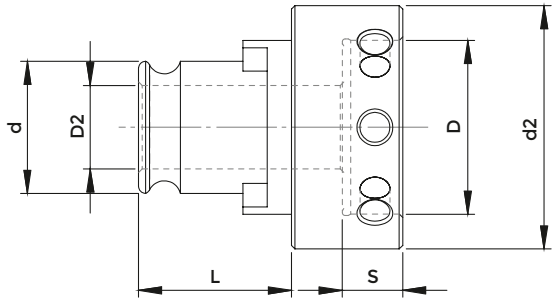

THREADING DIE ADAPTERS

COD.	DESCRIPTION	d	L	D	S	d2	D2
025100165	B.1 - F / 16 x 5	19	21,5	16	4,8	25	12,5
025100205	B.1 - F / 20 x 5	19	21,5	20	4,8	30	12,5
025100207	B.1 - F / 20 x 7	19	21,5	20	6,5	30	12,5
025100259	B.1 - F / 25 x 9	19	21,5	25	8,5	35	12,5
025103011	B.1 - F / 30 x 11	19	21,5	30	10	40	12,5
025103810	B.1 - F / 38 x 10	19	21,5	38	9	48	14,2
025103814	B.1 - F / 38 x 14	19	21,5	38	13	48	14,2
025200205	B.2 - F / 20 x 5	31	35	20	4,8	30	15
025200207	B.2 - F / 20 x 7	31	35	20	6,5	30	15
025200259	B.2 - F / 25 x 9	31	35	25	8,5	35	15
025203011	B.2 - F / 30 x 11	31	35	30	10	40	22
025203810	B.2 - F / 38 x 10	31	35	38	9	48	22
025203814	B.2 - F / 38 x 14	31	35	38	13	48	22
025204514	B.2 - F / 45 x 14	31	35	45	13	57	22
025204518	B.2 - F / 45 x 18	31	35	45	17	57	22

SHANKS DIMENSIONS FOR METRIC TAPPING TOOLS

SHANK Ø x □	STANDARD DIN 352	REINFORCED DIN 371	STANDARD DIN 376	STANDARD ISO	REINFORCED ISO	TYPE OF SLEEVE
2,50 x 2,10	M 1,0	M 1,0	M 3,5	-	-	0-1
2,50 x 2,10	M 1,4	M 1,4	-	-	-	0-1
2,50 x 2,10	M 1,6	M 1,6	-	-	-	0-1
2,50 x 2,10	M 1,8	M 1,8	-	-	-	0-1
2,80 x 2,10	M 2,0	M 2,0	M 4,0	-	-	0-1
2,80 x 2,10	M 2,2	M 2,2	-	-	-	0-1
2,80 x 2,10	M 2,5	M 2,5	-	-	-	0-1
3,15x2,50	-	-	-	M 4,0	M 3,0	0-1
3,50x2,70	M 3,0	M 3,0	M 5,0	-	-	0-1
3,55x2,80	-	-	-	M 4,5	M 3, 5	0-1
4,00x3,15	M 3,5	M 3,5	-	M 5,0	M 4,0	0-1
4,50x3,40	M 4,0	M 4,0	M 6,0	-	-	0-1
5,00x4,00	-	-	-	-	M 5, 0	0-1
5,50x4,30	-	-	M7,0	-	-	0-1
5,60x4,50	-	-	-	M 7,0	-	0-1
6,00x4,90	M 5,0	M 5,0	-	-	-	0-1-2
6,00x4,90	M 6, 0	M 6, 0	-	-	-	0-1-2
6,00x4,90	M 8, 0	-	M 8, 0	-	-	0-1-2
6,30x5,00	-	-		M 8,0	M 6,0	0-1-2
7,00x5,50	M 10,0	-	M 10,0	-	-	0-1-2
7,10x5,60	-	-	-	M 9,0	-	0-1-2
8,00x6,20		M 8,0	-	M 10,0	M 8,0	0-1-2
9,00x7,00	M 12,0	-	M 12,0	M 12, 0	-	1-2
10,00x8,00		M 10,0	-	-	M 10,0	1-2
11,00x9,00	M 14,0	-	M 14,0	-	-	1-2-3
11,20x9,00	-	-	-	M 14,0	-	1-2-3
12,00x9,00	M 16,0	-	M 16,0	-	-	1-2-3
12,50x10,00	-	-	-	M 16,0	-	2-3
14,00x11,00	M 18,0	-	M 18,0	-	-	2-3
14,00x11,20	-	-	-	M 18,0	-	2-3
14,00x11,20	-	-	-	M 20,0	-	2-3
16,00x12,00	M 20,0	-	M 20,0	-	-	2-3
16,00x12,50	-	-	-	M 22,0	-	2-3
18,00x14,00	-	-	-	M 24,0	-	2-3
18,00x14,50	M 22,0	-	M 22,0	-	-	2-3
18,00x14,50	M 24,0	-	M 24,0	-	-	2-3
20,00x16,00	M 27,0	-	M 27,0	M 27,0	-	2-3
20,00x16,00	-	-	-	M 30,0	-	2-3
22,00x18,00	M 30,0	-	M 30,0		-	2-3
25,00x20,00	M 33,0	-	M 33,0	M 36,0	-	3
28,00x22,00	M 36,0	-	M 36,0	-	-	3
32,00x24,00	M 39,0	-	M 39,0	-	-	3
32,00x24,00	M 42,0	-	M 42,0	-	-	3
36,00x29,00	M 45,0	-	M 45,0	-	-	3
36,00x29,00	M 48,0	-	M 48,0	-	-	3

ORIENTABLE ASSEMBLY STANDS NT - SK - BT - DOUBLE CONTACT SHANKS

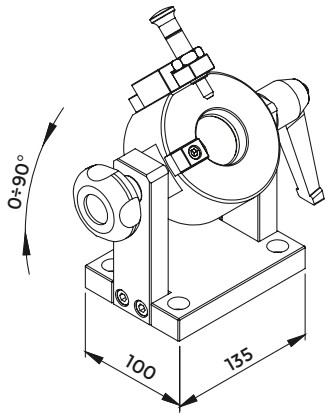

ISO DIN 2080 - DIN 69871 - BT - DOUBLE CONTACT SHANKS

COD.	DESCRIPTION	SCREW	HANDLE	KNOB
4438	SMU - CONO 30	1031	1032	1033
4439	SMU - CONO 40	1031	1032	1033
4440	SMU - CONO 45	1031	1032	1033
4441	SMU - CONO 50	1031	1032	1033

Flange locking is guaranteed by the spring system

ORIENTABLE ASSEMBLY STANDS HSK AND POLYGONAL SHANKS

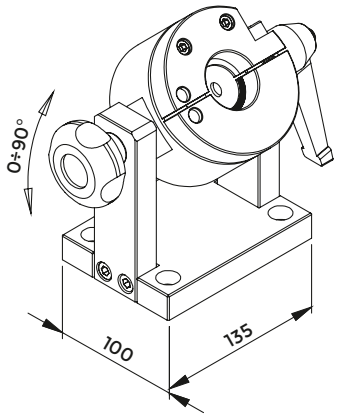

DIN 69893 (A+C - B+D - E - F) - ISO 26623-1

HSK DIN 69893 SHANKS

COD.	DESCRIPTION	HANDLE	KNOB
4598	SMU - HSK 25	1032	1033
4599	SMU - HSK 32	1032	1033
4600	SMU - HSK 40	1032	1033
4601	SMU - HSK 50	1032	1033
4602	SMU - HSK 63	1032	1033
4603	SMU - HSK 80	1032	1033
4604	SMU - HSK 100	1032	1033

POLYGONAL SHANKS

COD.	DESCRIPTION	HANDLE	KNOB
4599	SMU - POLIGONALE C 32	1032	1033
4600	SMU - POLIGONALE C 40	1032	1033
4601	SMU - POLIGONALE C 50	1032	1033
4602	SMU - POLIGONALE C 63	1032	1033
4603	SMU - POLIGONALE C 80	1032	1033
4604	SMU - POLIGONALE C100	1032	1033

ORIENTABLE ASSEMBLY STANDS DIN2080-DIN69871-MAS403BT-ANSI B5.50 CAT-HSK63

DIN2080-DIN69871-MAS403BT-ANSI B5.50 CAT-HSK63 — ECONOMIC VERSION

COD.	DESCRIPTION	ATTACK
268-30001	BLOCCO ISO40/BT40/TC40/HSK63	DIN2080-DIN69871-MAS403BT-ANSI B5.50 CAT-HSK63

STEEL TOOLING CLAMPERS

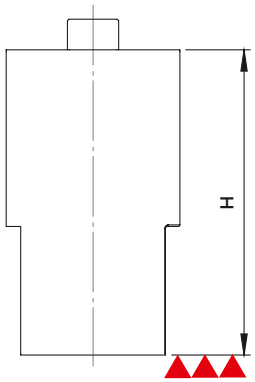

BMU TOOLS

COD.	DESCRIPTION	H
2190	BMU - CONO 30	70
2191	BMU - CONO 40	95
2193	BMU - CONO 50	130

Made with hardened steel, burnished and grinded.

DOUBLE POSITION ASSEMBLY STANDS

FIG. 1

FIG. 2

FIG. 3

FIG. 4

SMD TOOLS

COD.	DESCRIPTION	FIGURE	L x P x H
237-32310	SMD - ISO 40 / DIN 2080	1	350 x 135 x 155
237-32510	SMD - ISO 50 / DIN 2080	1	350 x 135 x 155
237-32320	SMD - TC 40 / DIN 69871	1	350 x 135 x 155
237-32520	SMD - TC 50 / DIN 69871	1	350 x 135 x 155
237-33320	SMD - TC 40 DOPPIO CONTATTO	1	350 x 135 x 155
237-33520	SMD - TC 50 DOPPIO CONTATTO	1	350 x 135 x 155
237-32130	SMD - BT 30 / MAS 403	1	350 x 135 x 155
237-32330	SMD - BT 40 / MAS 403	1	350 x 135 x 155
237-32530	SMD - BT 50 / MAS 403	1	350 x 135 x 155
237-33120	SMD - BT 30 DOPPIO CONTATTO	1	350 x 135 x 155
237-33330	SMD - BT 40 DOPPIO CONTATTO	1	350 x 135 x 155
237-33530	SMD - BT 50 DOPPIO CONTATTO	1	350 x 135 x 155

COD.	DESCRIPTION	FIGURE	L x P x H
237-32450	SMD - HSK 63A+C	2	350 x 135 x 155
237-32650	SMD - HSK 100 A+C	2	350 x 135 x 155
237-32470	SMD - HSK 63 E	2	350 x 135 x 155
237-32470	SMD - HSK 63 F	2	350 x 135 x 155

COD.	DESCRIPTION	FIGURE	L x P x H
237-33210	SMD - POLIGONALE C 40	3	350 x 135 x 155
237-33310	SMD - POLIGONALE C 50	3	350 x 135 x 155
237-33410	SMD - POLIGONALE C 63	3	350 x 135 x 155
237-33510	SMD - POLIGONALE C 80	3	350 x 135 x 155

COD.	DESCRIPTION	FIGURE	L x P x H
237-32490	SMD - VDI 30 / DIN 69880	4	350 x 135 x 155
237-32590	SMD - VDI 40 / DIN 69880	4	350 x 135 x 155
237-32690	SMD - VDI 50 / DIN 69880	4	350 x 135 x 155

SPINDLE SEAT TAPER CLEANERS

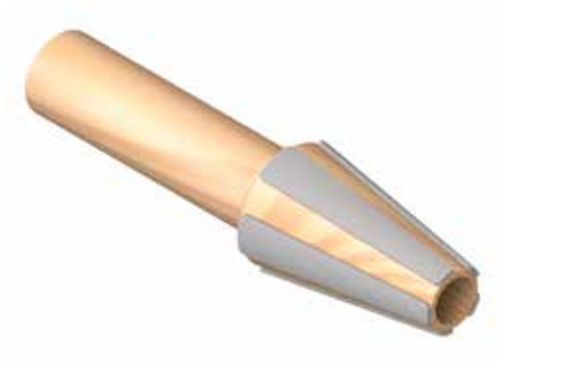

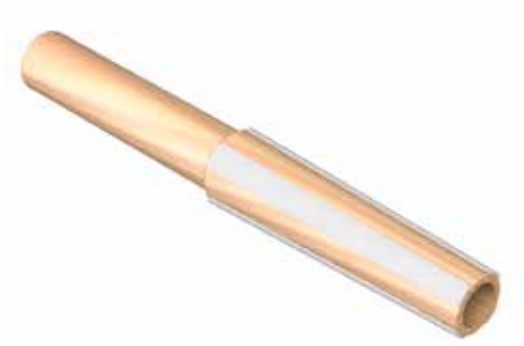

ISO SPINDLE SEAT

COD.	DESCRIPTION	ISO
4407	TP - ISO 30	30
4408	TP - ISO 40	40
4409	TP - ISO 45	45
4410	TP - ISO 50	50

MORSE TAPER SPINDLE SEAT

COD.	DESCRIPTION	CM
4411	TP - CM. 1	1
4412	TP - CM. 2	2
4413	TP - CM. 3	3
4414	TP - CM. 4	4
4415	TP - CM. 5	5
5065	TP - CM. 6	6

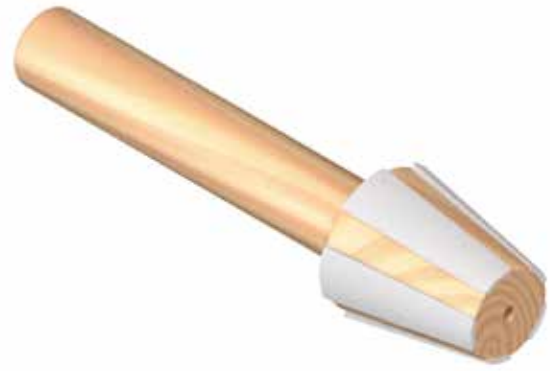

HSK SPINDLE SEAT

COD.	DESCRIPTION	HSK
5205	TP - HSK 32	32
5206	TP - HSK 40	40
5207	TP - HSK 50	50
5208	TP - HSK 63	63
5209	TP - HSK 80	80
5210	TP - HSK 100	100

ER COLLET SEAT TAPER CLEANERS

COD.	DESCRIPTION	ER
5375	TP - ER 16	16
5376	TP - ER 20	20
5377	TP - ER 25	25
5378	TP - ER 32	32
5379	TP - ER 40	40

TOOL STORES

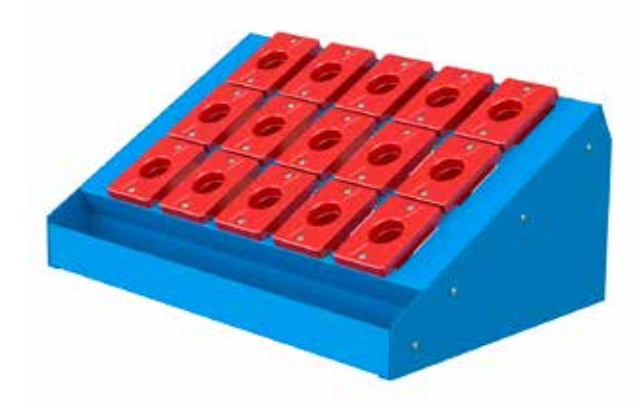

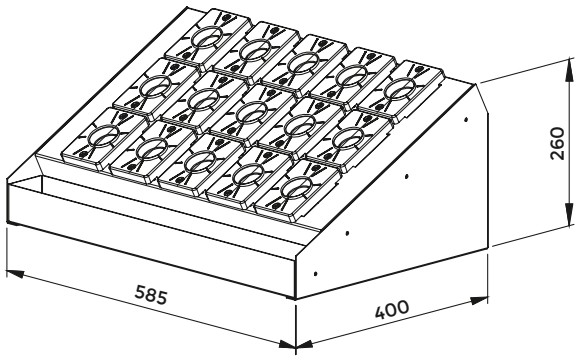

Supplied complete of red tool holder bushings.

COD.	DESCRIPTION	CHUCKS	NUMBER OF SEATS	TAPER BUSH	SCREW
ISO CHUCKS					
3700	MAG. ISO 30	30	15	4416	0033
3701	MAG. ISO 40	40	15	4417	0033
3702	MAG. ISO 45	45	15	4418	0033
3703	MAG. ISO 50	50	12	4419	0033
HSK CHUCKS					
9460	MAG. HSK 32 A - C - E	32	15	9440	0033
9461	MAG. HSK 40 A - C - E	40	15	9441	0033
3750	MAG. HSK 50 A - C - E	50	15	4430	0033
3751	MAG. HSK 63 A - C - E	63	15	4431	0033
9462	MAG. HSK 80 A - C	80	15	9442	0033
3875	MAG. HSK100 A - C	100	15	5543	0033
9461	MAG. HSK 50 F	50	15	9441	0033
3750	MAG. HSK 63 F	63	15	4430	0033
3751	MAG. HSK 80 F	80	15	4431	0033
POLYGONAL CHUCKS					
9463	MAG. POLIGONALE C 32	32	15	9443	0033
9464	MAG. POLIGONALE C 40	40	15	9444	0033
9465	MAG. POLIGONALE C 50	50	15	9445	0033
9466	MAG. POLIGONALE C 63	63	15	9446	0033
9467	MAG. POLIGONALE C 80	80	12	9447	0033
MT CHUCKS					
9468	MAG. CM 2	2	15	9448	0033
9469	MAG. CM 3	3	15	9449	0033
3696	MAG. CM 4	4	15	4400	0033
3702	MAG. CM 5	5	15	4418	0033
VDI CHUCKS					
3705	MAG. Ø 32 - VDI 30	30	15	5531	0033
3706	MAG. Ø 40 - VDI 40	40	15	5532	0033
5557	MAG. Ø 50 - VDI 50	50	12	5533	0033

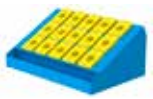

upon request
with yellow
tool holder
bushing

BENCH SUPPORTS

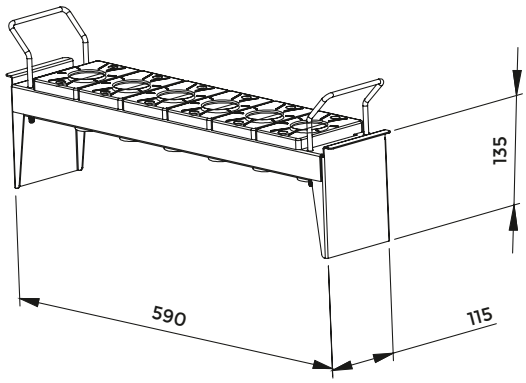

Supplied complete of red tool holder bushings.

COD.	DESCRIPTION	CHUCKS	NUMBER OF SEATS	TAPER BUSH
ISO CHUCKS				
4404	UNITÀ ISO 30	30	6	4416
4405	UNITÀ ISO 40	40	6	4417
4330G	UNITÀ ISO 45	45	6	4418G
4406	UNITÀ ISO 50	50	5	4419
HSK CHUCKS				
9450	UNITÀ HSK 32 A - C - E	32	6	9440
9451	UNITÀ HSK 40 A - C - E	40	6	9441
4428	UNITÀ HSK 50 A - C - E	50	6	4430
4429	UNITÀ HSK 63 A - C - E	63	6	4431
9452	UNITÀ HSK 80 A - C	80	5	9442
4794	UNITÀ HSK100 A - C	100	5	5543
9451	UNITÀ HSK 50 F	50	6	9441
4428	UNITÀ HSK 63 F	63	6	4430
4429	UNITÀ HSK 80 F	80	6	4431
POLYGONAL CHUCKS				
9453	UNITÀ POLIGONALE C 32	32	6	9443
9454	UNITÀ POLIGONALE C 40	40	6	9444
9455	UNITÀ POLIGONALE C 50	50	6	9445
9456	UNITÀ POLIGONALE C 63	63	6	9446
9457	UNITÀ POLIGONALE C 80	80	5	9447
MT CHUCKS				
9458	UNITÀ CM 2	2	6	9448
9459	UNITÀ CM 3	3	6	9449
4329	UNITÀ CM 4	4	6	4400
4330G	UNITÀ CM 5	5	6	4418G
VDI CHUCKS				
5369	UNITÀ Ø 32 - VDI 30	30	5	5531
5370	UNITÀ Ø 40 - VDI 40	40	5	5532
5371	UNITÀ Ø 50 - VDI 50	50	4	5533

upon request
with yellow
tool holder
bushing

TOOL HOLDER BUSHINGS

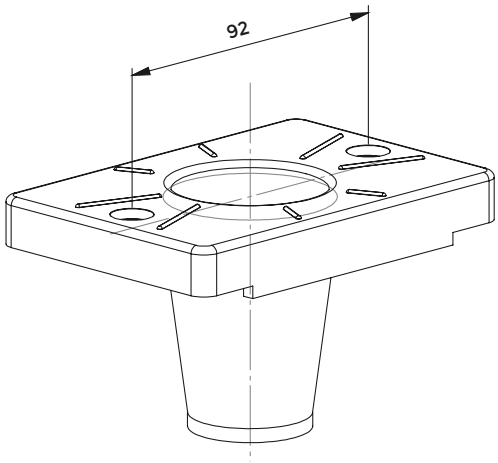

Supplied complete of red tool holder bushings.

COD.	DESCRIPTION	CHUCKS	SCREW
ISO CHUCKS			
4416	BOCCOLA ISO 30	30	0033
4417	BOCCOLA ISO 40	40	0033
4418G	BOCCOLA ISO 45	45	0033
4419	BOCCOLA ISO 50	50	0033
HSK CHUCKS			
9440	BOCCOLA HSK 32 A - C - E	32	0033
9441	BOCCOLA HSK 40 A - C - E	40	0033
4430	BOCCOLA HSK 50 A - C - E	50	0033
4431	BOCCOLA HSK 63 A - C - E	63	0033
9442	BOCCOLA HSK 80 A - C	80	0033
5543	BOCCOLA HSK 100 A - C	100	0033
9441	BOCCOLA HSK 50 F	50	0033
4430	BOCCOLA HSK 63 F	63	0033
4431	BOCCOLA HSK 80 F	80	0033
POLYGONAL CHUCKS			
9443	BOCCOLA POLIGONALE C 32	32	0033
9444	BOCCOLA POLIGONALE C 40	40	0033
9445	BOCCOLA POLIGONALE C 50	50	0033
9446	BOCCOLA POLIGONALE C 63	63	0033
9447	BOCCOLA POLIGONALE C 80	80	0033
CM CHUCKS			
9448	BOCCOLA CM 2	2	0033
9449	BOCCOLA CM 3	3	0033
4400	BOCCOLA CM 4	4	0033
4418	BOCCOLA CM 5	5	0033
VDI CHUCKS			
5531	BOCCOLA Ø 32 - VDI 30	30	0033
5532	BOCCOLA Ø 40 - VDI 40	40	0033
5533	BOCCOLA Ø 50 - VDI 50	50	0033

upon request
with yellow
tool holder
bushing

BRIGHT MAGNETIC RESETTER

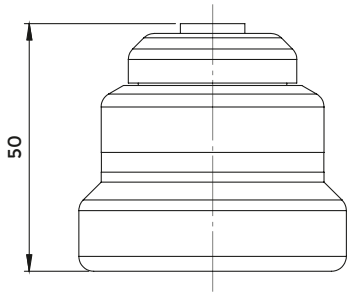

COD.	DESCRIPTION	BATTERY
0351	ZOP 50	0266

Permanent magnetic base

BUILD-IN MAGNETIC RESETTERS WITH DIAL GAUGE

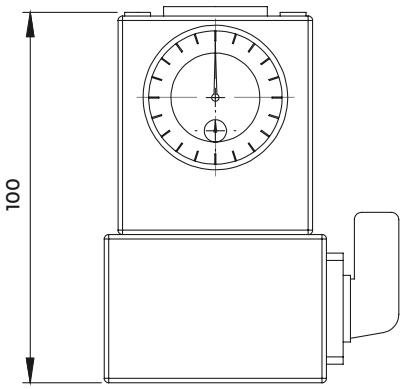

COD.	DESCRIPTION
0354	ZDI 100

- switch ON/OFF magnetic base
- dial gauge ø40 reading 0,01

BUILD-IN MAGNETIC RESETTERS WITH DIAL GAUGE

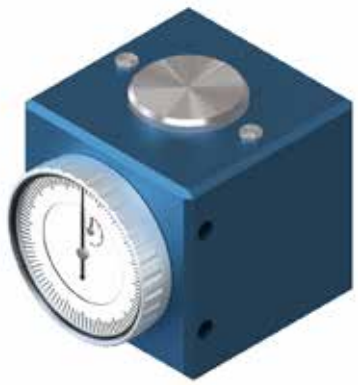

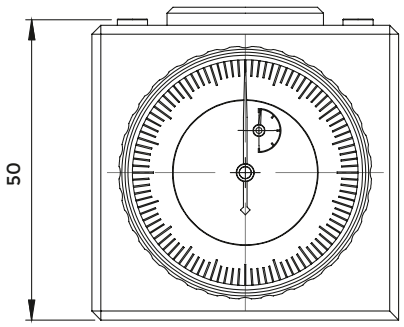

COD.	DESCRIPTION
0349	ZDI 50

- Permanent magnetic base
- dial gauge ø40 reading 0,01

FLOATING CENTERING DEVICE – GROUND

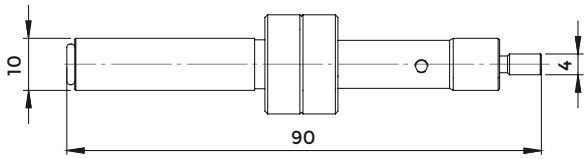

COD.	DESCRIPTION	REPLACEMENT SPRING
0356	CMP 10 - 4	0333

In CMP wrapping is included one spare spring

FLOATING CENTERING DEVICE – GROUND

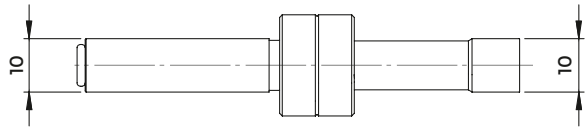

MAX 600 rpm

COD.	DESCRIPTION	REPLACEMENT SPRING
0357	CMP 10 - 10	0333

FLOATING CENTERING DEVICE – BURNISHED

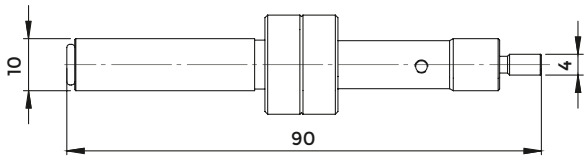

COD.	DESCRIPTION	REPLACEMENT SPRING
0242	CMB 10 - 4	0333

In CMP wrapping is included one spare spring

FLOATING CENTERING DEVICE – BURNISHED

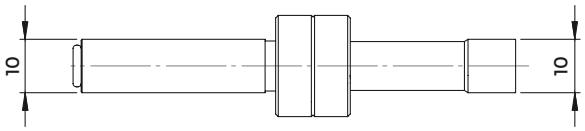

MAX 600 rpm

COD.	DESCRIPTION	REPLACEMENT SPRING
0243	CMB 10 - 10	0333

REPLACEMENT SPRINGS FOR CENTERING DEVICES

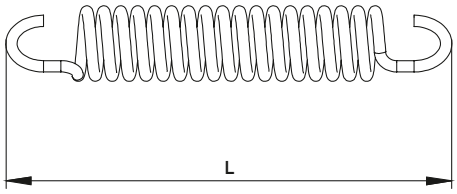

COD.	L
0333	50
0363	*55

* Recommended for edge finders without spring locking pin

NON MAGNETIC CENTERING DEVICE

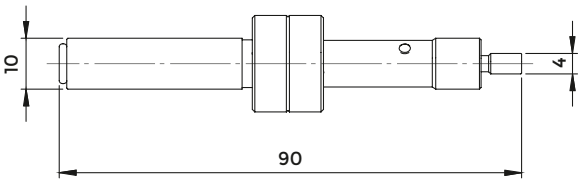

COD.	DESCRIPTION	REPLACEMENT SPRING
0445	CMA 10 - 4	0333

In CMA wrapping is included one spare spring

NON MAGNETIC CENTERING DEVICE – CERAMIC HEAD

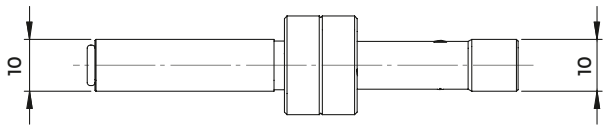

MAX 600 rpm

COD.	DESCRIPTION	REPLACEMENT SPRING
0447	CMA 10 - 10	0333

NON MAGNETIC CENTERING DEVICE – CERAMIC HEAD

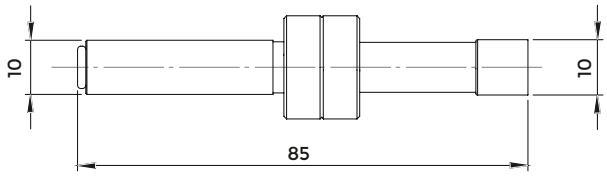

MAX 600 rpm

COD.	DESCRIPTION	REPLACEMENT SPRING
0455	CMD 10 - 10	0333

NON MAGNETIC SLIM CENTERING DEVICE – CERAMIC HEAD

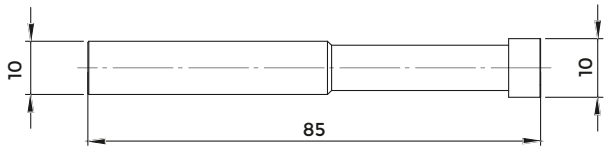

MAX 600 rpm

COD.	DESCRIPTION	REPLACEMENT SPRING
0457	CMC 10 - 10	0458

ELECTRONIC CENTERING DEVICE – WITH LIGHT

COD.	DESCRIPTION	L	BATTERY
0335	CSL 100	100	0266
0355	CSL 120	120	0562

with light signal

ELECTRONIC CENTERING DEVICE – WITH LIGHT AND SOUND

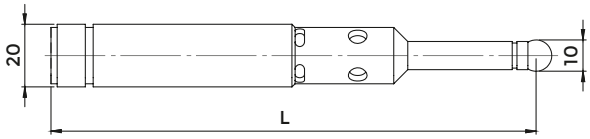

COD.	DESCRIPTION	L	BATTERY
0359	CSS 160	160	0562

with light and sound signal

ELECTRONIC 3D CENTERING DEVICE – WITH LIGHT AND SOUND

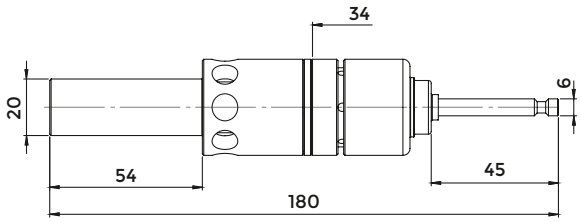

COD.	DESCRIPTION	TASTER	LED	BATTERY
0350	CTL 20 - 6	0322	0328	0595

3D with light and sound signal

TRIDIMENSIONAL POSITION DETECTORS WITH DIAL GAUGE

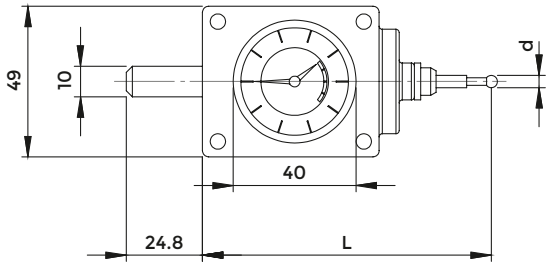

COD.	DESCRIPTION	d	L	TASTER
0541	CTZ 10 - 04	4	96	0619
0542	CTZ 10 - 08	8	136	0629

TRIDIMENSIONAL POSITION DETECTORS WITH DIAL GAUGE

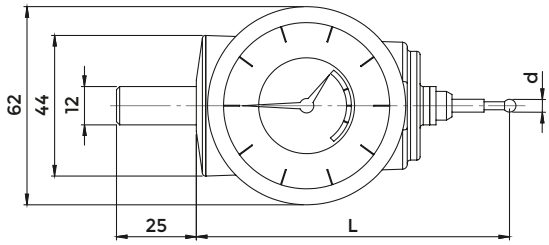

COD.	DESCRIPTION	d	L	TASTER
0543	CTN 12 - 04	4	100	0619
0544	CTN 12 - 08	8	140	0629

TRIDIMENSIONAL POSITION DETECTORS WITH DIAL GAUGE

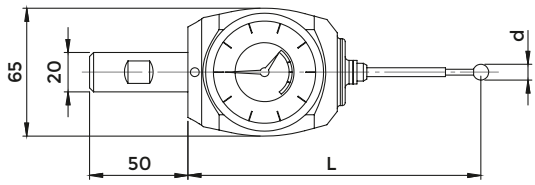

COD.	DESCRIPTION	d	L	TASTER
0584	CTA 20 - 04	4	113	0619
0585	CTA 20 - 08	8	153	0629

CERAMIC PROBE

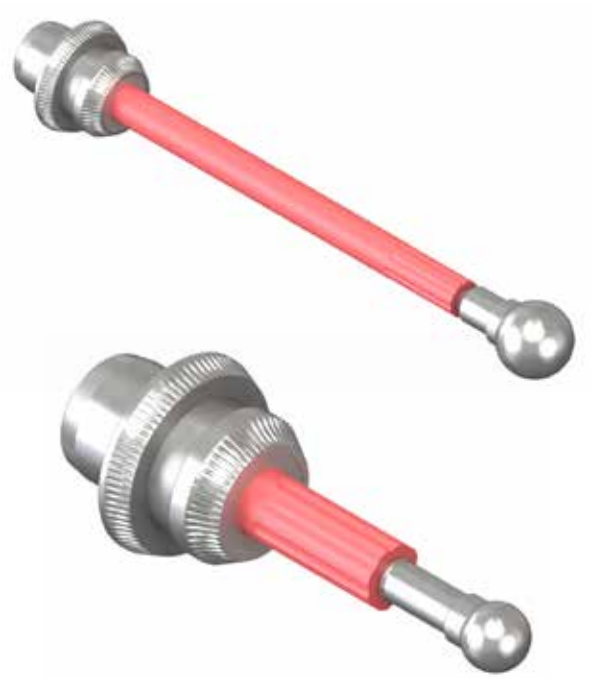

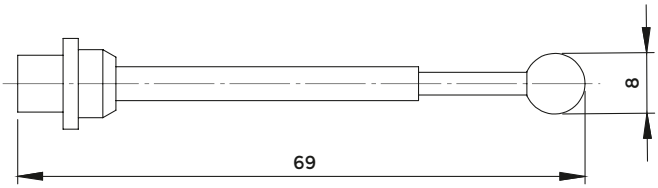

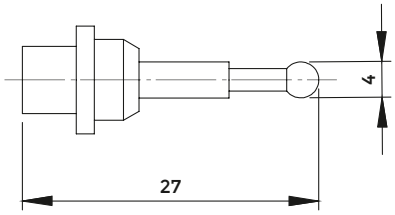

COD.	DESCRIPTION
0619	ASTINA CORTA d. 4
0629	ASTINA LUNGA d. 8

SPHERE COOLANT NOZZLES

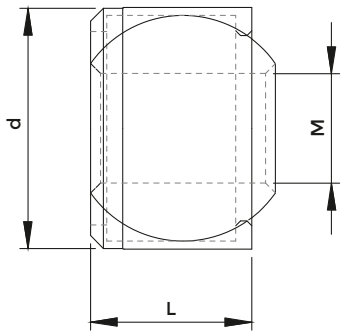

COD. G	COD. K	d	L	M
9200	833-001280	6	5	M 2,5
9201	833-001060	8	6	M 4
9202	833-001070	10	7	M 5
9203	833-001820	12	8	M 5
9204	833-001080	12	8	M 6
9205	833-001090	14	9	M 8
9206	833-001810	16	10	M 10x1

EXTENSIONS FOR COOLANT NOZZLES

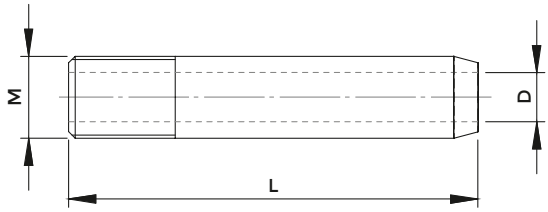

COD. G	COD. K	M	D	L
9210	-	M 3	1,5	25
9211	833-00151	M 4	1	30
9212	833-00152	M 4	2	30
9213	833-00153	M 5	2	30
9214	833-00154	M 5	3	40
9215	833-00155	M 6	2	35
9216	833-00156	M 6	3	35
9217	833-00157	M 6	4	50
9218	833-00158	M 8	2	40
9219	833-00159	M 8	3	40
9220	833-00160	M 8	4	40
9221	833-00161	M 8	5	50
9222	833-00162	M10x1	2	40
9223	-	M10x1	4	40
9224	833-00164	M10x1	6	50
9225	-	M10x1	8	50

SPHERE COOLANT NOZZLES FOR HIGH PRESSURE

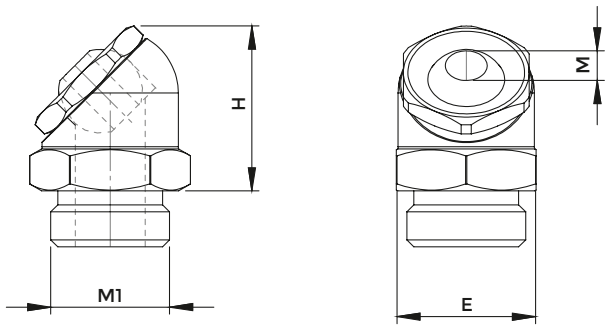

COD. G	M	E	M1	H
9235	M 3	16	1/8	19
9236	M 5	18	1/4	21
9237	M 6	20	3/8	23
9238	M 8	23	3/8	27

ORIENTABLE COOLANT NOZZLES FOR HIGH PRESSURE

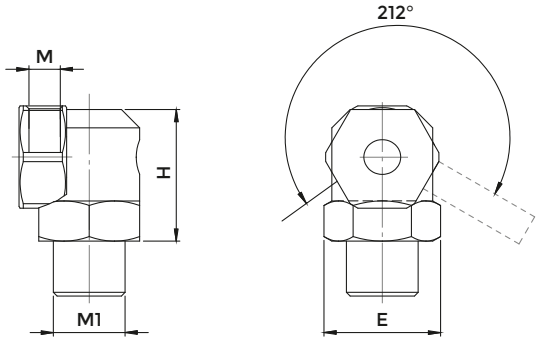

COD. G	M	E	M1	H
9240	M 4	12	1/8	17
9241	M 5	14	1/8	18
9242	M 6	17	1/4	21

SPACERS

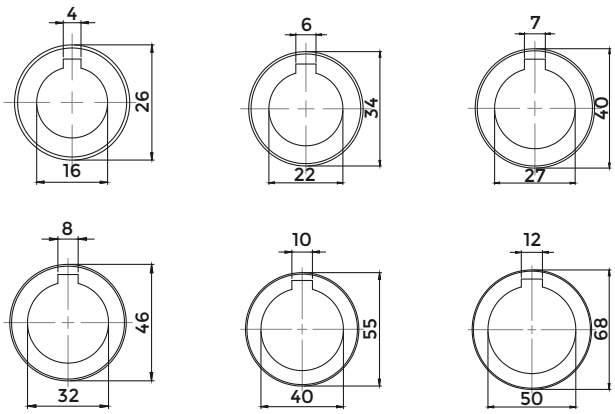

COD.	DESCRIPTION	THICKNESS
4084	AD - D.16	0,03 - 0,04 - 0,05 - 0,06 - 0,1 - 0,2 - 0,3 - 0,4 - 0,5 - 0,6 - 1,0 - 1,10 - 1,30 - 1,40 - 1,50 - 2,0 - 3,0 - 4,0 - 5,0 - 6,0 - 10,0 - 20,0 - 25,0 - 30,0 - 40,0
4085	AD - D.22	0,03 - 0,04 - 0,05 - 0,06 - 0,1 - 0,2 - 0,3 - 0,4 - 0,5 - 0,6 - 0,9 - 1,0 - 2,0 - 3,0 - 4,0 - 5,0 - 6,0 - 10,0 - 20,0 - 30,0 - 60,0 - 100, 0
4086	AD - D.27	0,03 - 0,04 - 0,05 - 0,06 - 0,1 - 0,2 - 0,3 - 0,4 - 0,5 - 0,6 - 0,7 - 0,8 - 1,0 - 2,0 - 3,0 - 4,0 - 5,0 - 6,0 - 10,0 - 20,0 - 30,0 - 60,0 - 100, 0
4087	AD - D.32	0,03 - 0,04 - 0,05 - 0,06 - 0,1 - 0,2 - 0,3 - 0,4 - 0,5 - 0,6 - 1,0 - 1,5 - 2,0 - 3,0 - 4,0 - 5,0 - 6,0 - 10,0 - 20,0 - 30,0 - 60,0 - 100, 0
4088	AD - D.40	0,03 - 0,04 - 0,05 - 0,06 - 0,1 - 0,15 - 0,2 - 0,3 - 0,4 - 0,5 - 0,6 - 0,7 - 0.8 - 1,0 - 1,5 - 2,0 - 3,0 - 4,0 - 5,0 - 6,0 - 7,0 - 10,0 - 20,0 - 30,0 - 60,0 - 100, 0
4089	AD - D.50	0,05 - 0,06 - 0,1 - 0,2 - 0,3 - 0,4 - 0,5 - 0,6 - 0,7 - 0,8 - 1,0 - 2,0 - 3,0 - 4,0 - 5,0 - 6,0 - 10,0 - 20,0 - 25,0 - 40,0 - 30,0 - 60,0 - 100, 0

MILL LOCKING CROSS HEAD SCREWS

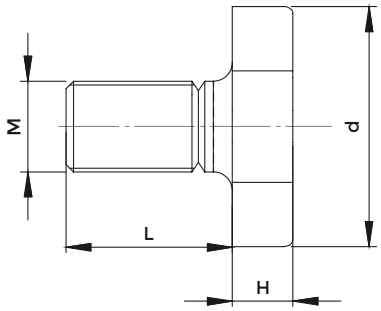

COD.	DESCRIPTION	M	d	L	H	WRENCH
811-107003	VTC 16	M 8	20	16	6	1032
811-107004	VTC 22	M 10	28	18	7	1032
811-107005	VTC 27	M 12	35	22	8	1032
811-107006	VTC 32	M 16	42	26	9	1032
811-107007	VTC 40	M 20	52	30	10	1032
811-107009	VTC 50	M 24	63	36	12	1032

MILL LOCKING CROSS HEAD SCREWS WITH COOLANT CHANNELS

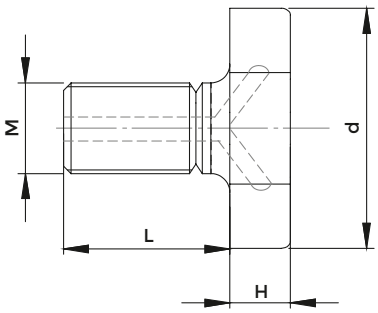

COD.	DESCRIPTION	M	d	L	H	WRENCH
811-107013	VPR 16	M 8	20	16	6	816-130002
811-107014	VPR 22	M 10	28	18	7	816-130003
811-107015	VPR 27	M 12	35	22	8	816-130004
811-107016	VPR 32	M 16	42	26	9	816-130005
811-107017	VPR 40	M 20	52	30	10	816-130006

WRENCHES FOR CROSS HEAD SCREWS

COD.	DESCRIPTION	CROSS HEAD SCREW
816-130002	CH 16 VTC	811-107003
816-130003	CH 22 VTC	811-107004
816-130004	CH 27 VTC	811-107005
816-130005	CH 32 VTC	811-107006
816-130006	CH 40 VTC	811-107007
816-130007	CH 50 VTC	811-107009

CLUTCH DRIVE RINGS FOR DIN 6358 COMBI SHELL MILL HOLDERS

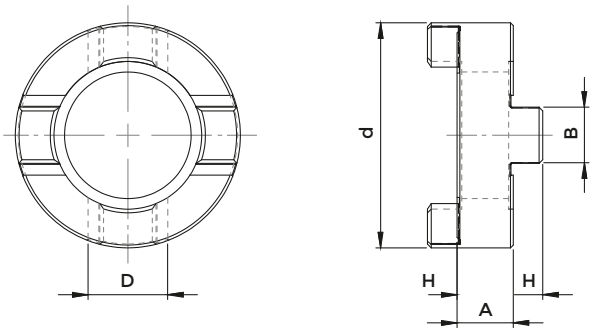

COD.	DESCRIPTION	D	d	H	B	A
814-30001	AT 16	16	32	5,0	10	8
814-30002	AT 22	22	40	5,6	12	10
814-30003	AT 27	27	48	6,3	12	12
814-30004	AT 32	32	58	7,0	14	14
814-30005	AT 40	40	70	8,0	14	16
4095	AT 50	50	90	9,0	16	18

DOWELS FOR FACE MILL HOLDERS

FIG. 1

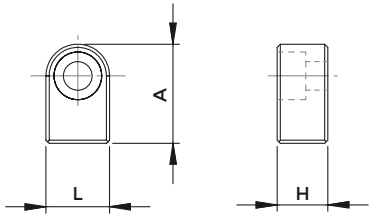

FIG. 2

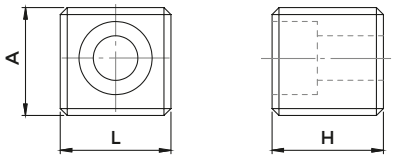

COD.	DESCRIPTION	H	L	A	FIG.	SCREW
814-20214	TPF - D. 16	7	8	13	1	811-101003
814-202280	TPF - D. 16	10,5	8	13	1	811-101004
814-202150	TPF - D. 22	8	10	15,6	1	811-101010
7070*	TPF - D. 22	10	10	18	1	811-101011
814-202250	TPF - D. 22	11,6	10	15,6	1	811-101011
814-202160	TPF - D. 27	9	12	18,3	1	811-101017
7071*	TPF - D. 27	12	12	18	1	811-101018
814-202270	TPF - D. 27	13,3	12	18,3	1	811-101018
814-202170	TPF - D. 32	11	14	21	1	811-101027
7072*	TPF - D. 32	14	14	22	1	811-101029
814-202290	TPF - D. 32	15	14	21	1	811-101029
814-202630	TPF - D. 32	20,5	14	21	1	811-101029
814-202180	TPF - D. 40	13	16	24	1	0207
814-202080	TPF - D. 40	16	15,9	15,5	2	0207
7073*	TPF - D. 40	16	15,9	19,5	2	0207
814-202710	TPF - D. 40	22,5	16	24	1	811-101029
814-202120	TPF - D. 60	25	25,4	28	2	811-101064

*Dowels for special exectuions

KEYS

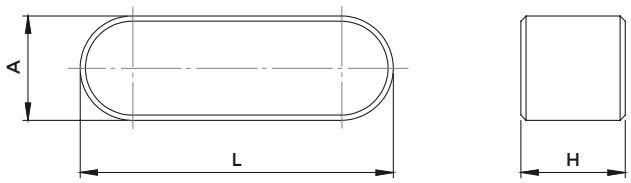

COD.	A	H	L
0103	3	3	10
0041	4	4	12
814-201010	4	4	20
0147	4	4	22
0258	5	4	18
814-20279	5	4	20
0044	6	6	15
814-20282	6	6	20
814-201020	6	6	25
0148	6	6	32

follows >>

COD.	A	H	L
0045	7	7	16
814-201030	7	7	25
0149	7	7	50
0047	8	7	16
814-20283	8	7	25
814-201040	8	7	28
0150	8	7	50
814-201050	10	8	32
0151	10	8	50
0137	12	8	36
0152	12	8	50

SPARES FOR MT ADAPTERS FOR MILLING CUTTERS DIN 228 FORM A SHANK TIE RODS FOR MILL

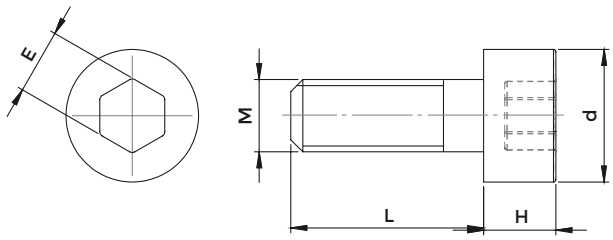

COD.	CM	M	L	d	H	E	STEP
7056*	CM 2	M 10	30	12,9	6,5	7	1,5
811-111007	CM2	M 10	30	13	10	8	1,5
7057*	CM 3	M 12	30	18	7	8	1,75
7402	CM 3	M 12	35	17	12	8	1,75
7403	CM 3	M 12	35	18	12	10	1,75
7058*	CM 3	M 12	40	18	7	8	1,75
7404	CM 4	M 16	40	20	16	10	2
7407	CM 4	M 16	40	21,5	16	14	2
811-401147	CM 4	M 16	45	21,5	9	12	2
7067*	CM 4	M 16	45	23	9	12	2
7069*	CM5	M 20	50	30	11	14	2,5
7408*	CM5	M 20	55	30	20	17	2,5

*Tie rods for special executions

SPARES FOR MT ADAPTERS FOR MILLING CUTTERS DIN 228 FORM A SHANK LEFT NUTS FOR TIE RODS

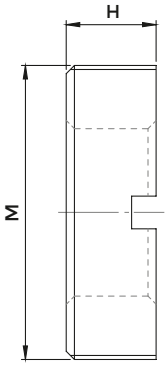

COD.	CM	M	H	WRENCH
811-302037	CM 1	M 10 x 1 SX	6	816-20204002
811-302031	CM 2	M 15 x 1,5 SX	6	816-20205002
811-302032	CM 3	M 20 x 1,5 SX	6	816-20206002
811-302036	CM 4	M 24 x 1,5 SX	8,5	816-20207002
811-302034	CM 5	M 36 x 2 SX	11	816-20208002

SPARES FOR MT ADAPTERS FOR MILLING CUTTERS DIN 228 FORM A SHANK WRENCHES FOR LEFT NUTS

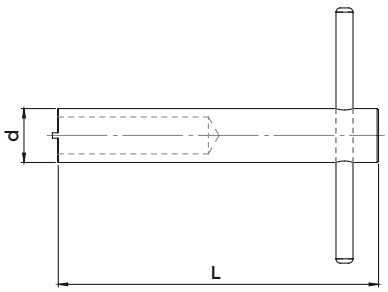

COD.	CM	d	L	NUT
816-20204002	CM 1	9,9	95	811-302037
816-20205002	CM 2	14,8	110	811-302031
816-20206002	CM 3	19,2	115	811-302032
816-20207002	CM 4	23	140	811-302036
816-20208002	CM 5	37	172	811-302034

SPARES FOR COMBI MT ADAPTERS: TWIST DRILLS + MILLING CUTTERS REDUCERS FOR TIE RODS

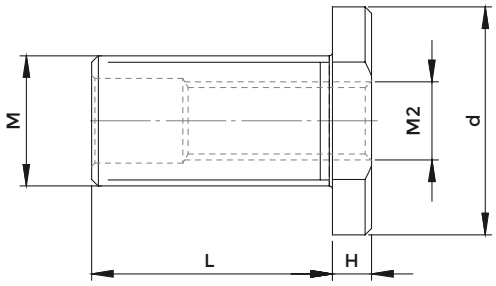

COD	CM	M	M2	L	H	d
811-302010	CM 2	M 10	M 6	19	3	14
811-302006	CM 3	M 12	M 6	25	3	19
0129	CM 4	M 16	M10	27	3	25
811-302008	CM 5	M 20	M12	37	6	35

*Tie rods for special executions

ROUND HEAD SCREWS

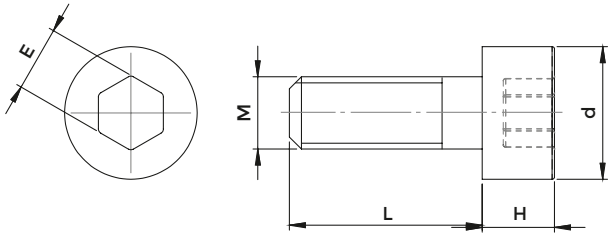

COD.	M	L	d	H	E	STEP
811-101003	M 3	8	5,5	3	2,5	0,5
811-101004	M 3	10	5,5	3	2,5	0,5
811-101010	M 4	10	7	4	3	0,7
811-101011	M 4	12	7	4	3	0,7
811-101017	M 5	12	8,5	5	4	0,8
811-101018	M 5	18	8,5	5	4	0,8
0484	M 6	10	10	6	5	1
811-101027	M 6	12	10	6	5	1
811-101028	M 6	14	10	6	5	1
0207	M 6	18	10	6	5	1
7447	M 6	20	8,5	4	4	1
811-101029	M 6	20	10	6	5	1
811-101030	M 6	25	10	6	5	1
0031	M 6	30	10	6	5	1
7400	M 6	35	10	6	5	1
7046	M 6	45	10	6	5	1
811-101077	M 6	55	10	6	5	1
7054	M 6	60	10	6	5	1
7047	M 6	75	10	6	5	1
0297	M 8	12	13	8	6	1,25
0491	M 8	16	13	8	6	1,25
0023	M 8	20	13	8	6	1,25
0586	M 8	30	10	8	6	1,25
0533	M 8	30	13	8	6	1,25
7056	M 10	30	12,9	6,5	7	1,5
811-111007	M 10	30	13	10	8	1,5
0120	M 10	30	16	10	8	1,5
7413	M 10	35	16	10	8	1,5
7048	M 10	40	12,9	6,5	8	1,5
7049	M 10	40	16	10	8	1,5
7401	M 10	45	13,5	10	8	1,5

follows >>

COD.	M	L	d	H	E	STEP
7050	M 10	45	16	6,5	7	1,5
7405	M 10	45	16	10	8	1,5
0056	M 10	50	16	10	8	1,5
7051	M 10	60	13,5	10	8	1,5
7052	M 10	60	16	10	8	1,5
811-101078	M 10	70	16	10	8	1,5
7053	M 10	90	16	10	8	1,5
811-101064	M 12	25	18	12	10	1,75
7057	M 12	30	18	7	8	1,75
811-101065	M 12	30	18	12	10	1,75
7402	M 12	35	17	12	8	1,75
7403	M 12	35	18	12	10	1,75
7058	M 12	40	18	7	8	1,75
7416	M 12	45	18	12	10	1,75
0177	M 12	50	18	12	10	1,75
7455	M 12	55	17	12	10	1,75
811-101070	M 12	55	18	12	10	1,75
811-101079	M 12	70	18	12	10	1,75
0055	M 12	85	18	12	10	1,75
7404	M 16	40	20	16	10	2
7407	M 16	40	21,5	16	14	2
7450	M 16	40	24	16	14	2
811-401147	M 16	45	21,5	9	12	2
7067	M 16	45	23	9	12	2
7409	M 16	60	20,5	16	14	2
811-401150	M 16	60	21,5	9	12	2
7451	M 16	60	24	16	14	2
0042	M 16	80	20,5	16	14	2
7069	M 20	50	30	11	14	2,5
7408	M 20	55	30	20	17	2,5
811-401151	M 24	60	36	13	17	3
811-401152	M 24	90	36	13	17	3

LOCKING SCREWS FOR END MILL HOLDERS

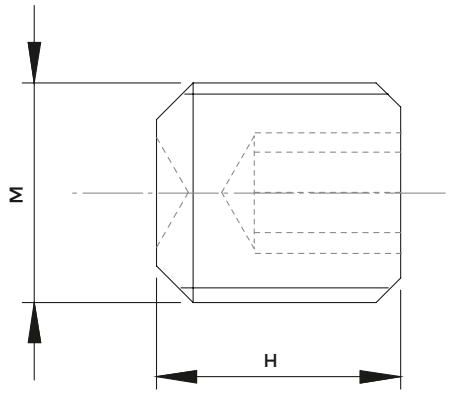

COD.	DESCRIPTION	F x H	STEP
811-106001	G - WE 6	M 6 x 10	1
811-106002	G - WE 8	M 8 x 10	1,25
811-106004	G - WE 10	M 10 x 12	1,5
811-106005	G - WE 12	M 12 x 16	1,75
811-106005	G - WE 14	M 12 x 16	1,75
811-106006	G - WE 16	M 14 x 16	2
811-106006	G - WE 18	M 14 x 16	2
811-106007	G - WE 20	M 16 x 16	2
811-106008	G - WE 25	M 18 x 2 x 20	2
811-106009	G - WE 32	M 20 x 2 x 20	2
811-106009	G - WE 40	M 20 x 2 x 20	2
4978	G - WE 50	M 24 x 2 x 20	2

SETTING AND LOCKING SCREWS

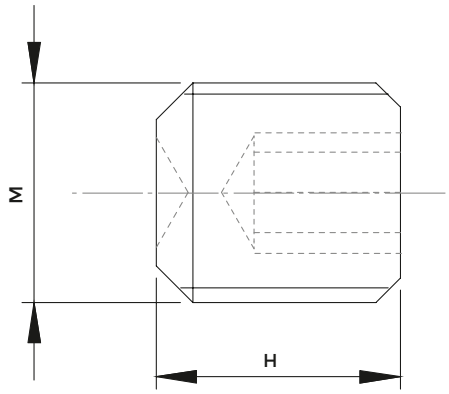

COD.	DESCRIPTION	STEP
0011	M 4 x 4	0,7
0380	M 4 x 8	0,7
811-102113	M 4 x 14	0,7
0017	M 5 x 4	0,8
811-102009	M 5 x 5	0,8
0365	M 5 x 6	0,8
0366	M 5 x 10	0,8
0285	M 5 x 30	0,8
0388	M 5 x 40	0,8
0367	M 6 x 4	1
0368	M 6 x 5	1
811-106015	M 6 x 6	1
0370	M 6 x 8	1
811-106001	M 6 x 10	1
811-102020	M 6 x 12	1
811-102114	M 6 x 14	1
811-102021	M 6 x 16	1
0253	M 6 x 40	1
811-106036	M 8 x 6	1,25
811-102026	M 8 x 8	1,25
811-106002	M 8 x 10	1,25
811-102028	M 8 x 12	1,25
811-102029	M 8 x 16	1,25
811-102030	M 8 x 20	1,25
811-102034	M 8 x 40	1,25
0409	M 10 x 1 x10	1
811-402003	M 10 x 1 x12	1
0385	M 10 x 8	1,5

follows >>

COD.	DESCRIPTION	STEP
811-106003	M 10 x 10	1,5
811-106004	M 10 x 12	1,5
811-102037	M 10 x 16	1,5
811-102038	M 10 x 20	1,5
811-402005	M 12 x 1 x12	1
811-106013	M 12 x 10	1,75
811-102064	M 12 x 12	1,75
811-102069	M 12 x 14	1,75
811-106005	M 12 x 16	1,75
811-102046	M 12 x 30	1,75
0074	M 14 x 1 x 6	1
0401	M 14 x1,5 x 16	1,5
811-106026	M 14 x 10	2
811-106027	M 14 x 12	2
0068	M 14 x 14	2
811-106006	M 14 x 16	2
811-402007	M 16 x 1 x12	1
0420	M 16 x 1 x16	1
0404	M 16 x1,5 x 12	1,5
0073	M 16 x 10	2
811-106032	M 16 x 12	2
0400	M 16 x 14	2
811-106007	M 16 x 16	2
811-106014	M 18 x 2 x12	2
811-106042	M 18 x 2 x17	2
811-106008	M 18 x 2 x 20	2
0259	M 20 x 2 x 17	2
811-106009	M 20 x 2 x 20	2
4978	M 24 x 2 x 20	2

SETTING AND LOCKING SCREWS WITH TROUGH HOLE

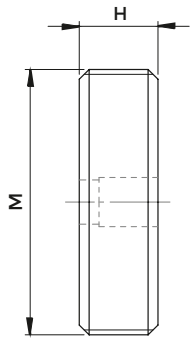

COD.	DESCRIPTION	STEP
0190	M 18 x1,5 x 8	1,5
811-303118	M 22 x1,5 x 8	1,5
0195	M 27 x1,5 x 8	1,5

LOCKING SCREWS WITH TROUGH HOLE WITH TROUGH HOLE

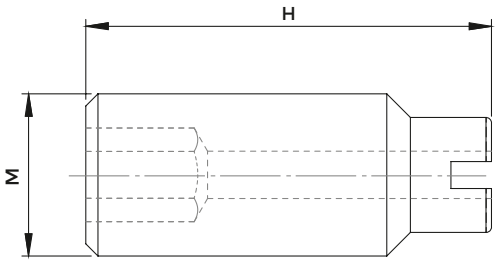

COD.	DESCRIPTION	STEP
811-303043	M 5 x 16	0,8
811-303081	M 6 x 16	1
811-303082	M 8 x 20	1,25
811-303083	M 10 x 25	1,5

COD.	DESCRIPTION	STEP
811-303084	M 12 x 30	1,75
1226	M 16 x 20	2
0212	M 20 x 20	2,5
0247	M 20 x 30	2,5

follows >>

LOCKING SCREWS WITH TAPER TIP

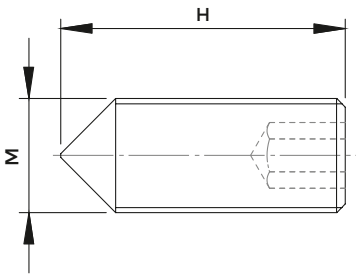

COD.	DESCRIPTION	STEP
0510	M 4 x 4	0,7
0015	M 4 x 14	0,7
0513	M 5 x 5	0,8
0529	M 5 x 6	0,8

COD.	DESCRIPTION	STEP
0016	M 5 x 10	0,8
0036	M 5 x 16	0,8
0531	M 6 x 6	1
0557	M 6 x 10	1
0037	M 8 x 8	1,25

follows >>

ETS COLLETS

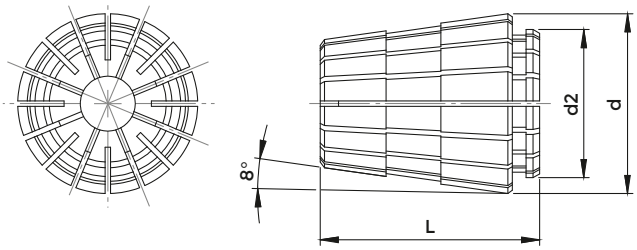

ETS

COD.	DESCRIPTION	RANGE	CLAMPING	STEP	d	d2	L	EINHEITS
5200	ETS 16	1 ÷ 3 3 ÷ 10	mm 0,5 mm 1,0	0,5	17	13,6	24	4018E
5201	ETS 20	2 ÷ 3 3 ÷ 13	mm 0,5 mm 1,0	0,5	21	17	30,5	4272E
5202	ETS 25	2 ÷ 3 3 ÷ 16	mm 0,5 mm 1,0	0,5	26	21	34	4280E
5203	ETS 32	3 ÷ 20	mm 1,0	0,5	33	27,2	40	4534E
5204	ETS 40	3 ÷ 26	mm 1,0	0,5	41	32	46	4768E

ETS collets are interchangeable with ER collets (DIN 6499 - ISO 15488) thanks to the same 8° rear taper.
To fit them in a standard ER collet chuck, a nut replacement is needed because of the difference in fore part of the collet.

CHARACTERISTICS:

- System with high precision
- An excellent yeld in high speed

	COD.	N° OF SEATS	COLLET
PLASTIC EMPTY TRAY	3674	16	ETS 16
	3675	16	ETS 20
	3676	20	ETS 25
	3677	20	ETS 32
	3678	28	ETS 40

	COD.	N° OF SEATS	COLLET
WOODEN EMPTY BOX	3976	12	ETS 16
	3977	12	ETS 20
	3978	15	ETS 25
	3979	18	ETS 32
	3980	24	ETS 40

STANDARD CLAMPING NUTS FOR ETS COLLETS

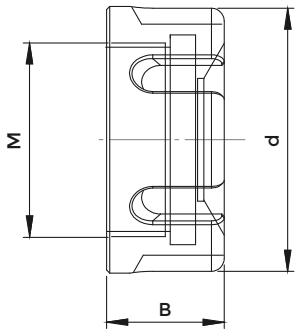

STANDARD CLAMPING NUTS FOR ETS COLLETS
Standard nuts for ETS collets have the same thread than ER Standard nuts; this makes interchangeable those two systems

ETS

COD.	DESCRIPTION	A	B	C	COLLET	WRENCH
5294	GS 16 ETS	32	15	22 x 1,5	5200	3698
5295	GS 20 ETS	35	16,5	25 x 1,5	5201	3699
5296	GS 25 ETS	42	18,5	32 x 1,5	5202	3669
5297	GS 32 ETS	50	22	40 x 1,5	5203	3670
5298	GS 40 ETS	63	25	50 x 1,5	5204	3671

EOC COLLETS

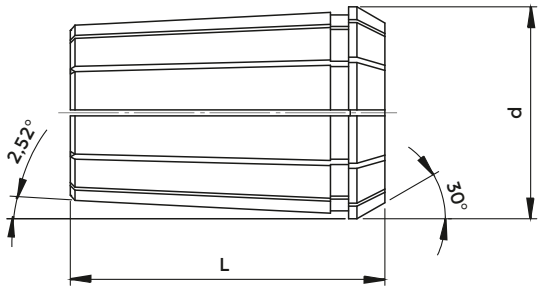

DIN 6388

COD.	DESCRIPTION	RANGE	STEP	d	L	EINHEITS
0578	EOC 6	1 ÷ 6	0,5	11,5	21	400E
0624	EOC 8	1 ÷ 8	0,5	14,5	26	401E
0633	EOC 10	1 ÷ 10	0,5	17,2	30	404E
0645	EOC 12	1 ÷ 12	0,5	19,8	34	407E
0768	EOC 16	2 ÷ 16	0,5	25,5	40	415E
0783	EOC 20	2 ÷ 20	0,5	29,8	45	4541E
0769	EOC 25	2 ÷ 25	0,5	35,05	52	462E
0770	EOC 32	3 ÷ 32	0,5	43,7	60	467E
0802	EOC 40	8 ÷ 40	1	52,2	68	468E

REDUCED SET OF EOC COLLETS

	COD.	DESCRIPTION	DIAMETERS	N° OF COLLETS
IN SINGLE PACKS	7010	EOC 16 Reduced	Ø 4 - 6 - 8 - 10 - 12 - 16	6
	7011	EOC 25 Reduced	Ø 6 - 8 - 10 - 12 - 16 - 20 - 25	7
	7012	EOC 32 Reduced	Ø 6 - 8 - 10 - 12 - 16 - 20 - 25 - 32	8
IN CASE	7016	EOC 16 Reduced	Ø 4 - 6 - 8 - 10 - 12 - 16	6
	7017	EOC 25 Reduced	Ø 6 - 8 - 10 - 12 - 16 - 20 - 25	7
	7018	EOC 32 Reduced	Ø 6 - 8 - 10 - 12 - 16 - 20 - 25 - 32	8

COMPLETE SET OF EOC COLLETS

	COD.	DESCRIPTION	DIAMETERS	N° OF COLLETS
IN SINGLE PACKS	7013	EOC 16 Completa	da Ø 2 a Ø 16	15
	7014	EOC 25 Completa	da Ø 2 a Ø 25	24
	7015	EOC 32 Completa	da Ø 4 a Ø 32	29
IN CASE	7019	EOC 16 Completa	da Ø 2 a Ø 16	15
	7020	EOC 25 Completa	da Ø 2 a Ø 25	24
	7021	EOC 32 Completa	da Ø 4 a Ø 32	29

SEALED EOC COLLETS

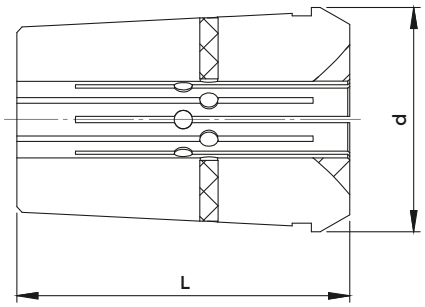

Coolant flows exclusively through central hole, collet cuts are sealed with neoprene inserts (above Ø 3). Working pressure: up to 40 Bar / 600 PSI

DIN 6388

COD.	DESCRIPTION	RANGE	STEP	d	L
0768 RF	EOC 16 RF	3 ÷ 16	0,5	25,5	40
0769 RF	EOC 25 RF	3 ÷ 25	0,5	35,05	52
0770 RF	EOC 32 RF	4 ÷ 32	1	44	60

CLAMPING NUTS FOR EOC COLLETS

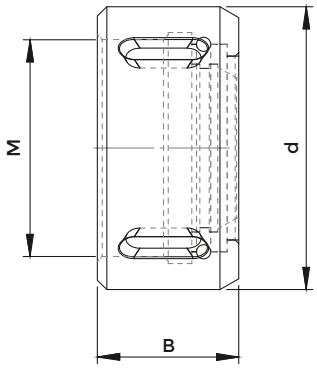

DIN 6388

COD.	DESCRIPTION	d	B	M	COLLET	WRENCH
8641	GOC 6	18	14	14 x 1,0	0578	2880
8642	GOC 8	26	19	20 x 1,5	0624	2820
8643	GOC 10	30	19	22 x 1,5	0633	2881
8644	GOC 12	35	20	27 x 1,5	0645	2882
4067	GOC 16	43	24	33 x 1,5	0768	2883
4008	GOC 20	50	28	42 x 2,0	0783	2908
4068	GOC 25	60	30	48 x 2,0	0769	2909
4069	GOC 32	72	33,5	60 x 2,5	0770	2910
8645	GOC 40	85	37	68 x 2,5	0802	2836

COLLETS FOR HIGH GRIP DEVICES

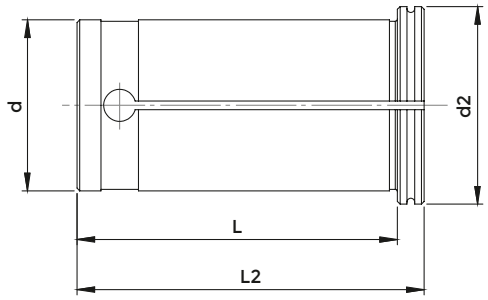

PC

COD.	DESCRIPTION	RANGE	STEP	d	d2	L	L2
0804	PC 12	3 ÷ 8 OVERSIZE 9 ÷ 10	1,0	12	19	45,5	44,5
0805	PC 16	3 ÷ 12	1,0	16	19	46	50
0809	PC 20	3 ÷ 16 OVERSIZE 17 ÷ 18	1,0	20	25	49	52,5
0820	PC 25	3 ÷ 20 OVERSIZE 21 ÷ 22	1,0	25	31	55	60
0810	PC 32	3 ÷ 25 OVERSIZE 26 ÷ 30	1,0	32	37,5	59,5	64,5

REDUCED SET OF PC COLLETS

	COD.	DESCRIPTION	DIAMETERS	N° OF COLLETS
IN SINGLE PACKS	7680	PC 20 Reduced	Ø 6 - 8 - 10 - 12 - 16	5
	7681	PC 25 Reduced	Ø 6 - 8 - 10 - 12 - 16 - 20	6
	7682	PC 32 Reduced	Ø 6 - 8 - 10 - 12 - 16 - 20 - 25	7
IN CASE	7683	PC 20 Reduced	Ø 6 - 8 - 10 - 12 - 16	5
	7684	PC 25 Reduced	Ø 6 - 8 - 10 - 12 - 16 - 20	6
	7685	PC 32 Reduced	Ø 6 - 8 - 10 - 12 - 16 - 20 - 25	7

ULTRA PRECISION COLLETS FOR HIGH GRIP DEVICES

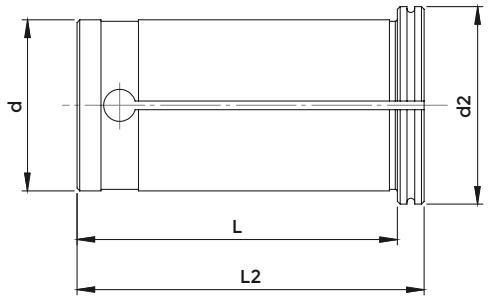

Collets with the same features of PC type but with an high precision: ≤ 0,005 runout accuracy.

PC-UP

COD.	DESCRIPTION	RANGE	STEP	d	d2	L	L2
0809 UP	PC 20 UP	3 ÷ 16	1	20	25	49	52,5
0820 UP	PC 25 UP	3 ÷ 20	1	25	31	55	60
0810 UP	PC 32 UP	3 ÷ 25	1	32	37,5	59,5	64,5

REDUCED SET OF PC-UP COLLETS

	COD.	DESCRIPTION	DIAMETERS	N° OF COLLETS
IN SINGLE PACKS	7036	PC 20 UP Reduced	Ø 6 - 8 - 10 - 12 - 16	5
	7037	PC 25 UP Reduced	Ø 6 - 8 -10 - 12 - 16 - 20	6
	7038	PC 32 UP Reduced	Ø 6 - 8 - 10 -12 - 16 - 20 - 25	7
IN CASE	7039	PC 20 UP Reduced	Ø 6 - 8 - 10 - 12 - 16	5
	7040	PC 25 UP Reduced	Ø 6 - 8 - 10 - 12 - 16 - 20	6
	7041	PC 32 UP Reduced	Ø 6 - 8 - 10 - 12 - 16 - 20 - 25	7

SEALED COLLETS FOR HYDRAULIC CHUCKS

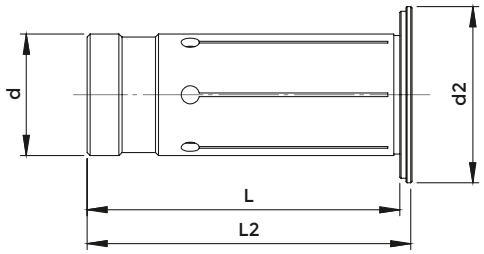

OVERSIZE diameters, for the construction characteristics, do not allow the use at high pressures. Working pressure: up to 70 Bar / 1020 PSI

PH

COD.	DESCRIPTION	RANGE	STEP	d	d2	L	L2
OGX12D..	PH 12	2,5 ÷ 8 OVERSIZE 9 ÷ 10	1	12	16,5	45	47
OGX20D..	PH 20	3 ÷ 16 OVERSIZE 17 ÷ 18	1	20	24	50,5	52,5
0676	PH 25	6 ÷ 20 OVERSIZE 21 ÷ 22	1	25	29	54,5	56,5
OGX32D..	PH 32	6 ÷ 25 OVERSIZE 26 ÷ 28	1	32	35,5	60,5	62,5

REDUCED SET OF PH COLLETS

	COD.	DESCRIPTION	DIAMETERS	N° OF COLLETS
IN SINGLE PACKS	7700	PH 20 Reduced	Ø 6 - 8 - 10 - 12 - 16	5
	7701	PH 25 Reduced	Ø 6 - 8 - 10 - 12 - 16 - 20	6
	7702	PH 32 Reduced	Ø 6 - 8 - 10 - 12 - 16 - 20 - 25	7
IN CASE	7703	PH 20 Reduced	Ø 6 - 8 - 10 - 12 - 16	5
	7705	PH 25 Reduced	Ø 6 - 8 - 10 - 12 - 16 - 20	6
	7706	PH 32 Reduced	Ø 6 - 8 - 10 - 12 - 16 - 20 - 25	7

DA COLLETS

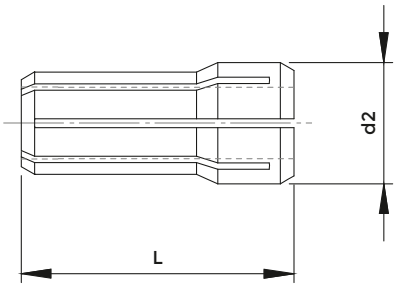

DA

COD.	DESCRIPTION	d	L	RANGE	CLAMPING	EINHEITS
5118	DA 300	9,5	25,4	1 ÷ 6,5	mm 0,5	416E
5119	DA 200	13,6	30,3	1 ÷ 10,0	mm 0,5	417E
5120	DA 100	19,4	36,7	1 ÷ 15,0	mm 0,5	418E
5121	DA 180	26,2	41,6	2 ÷ 20,0	mm 0,5	419E

TG COLLETS

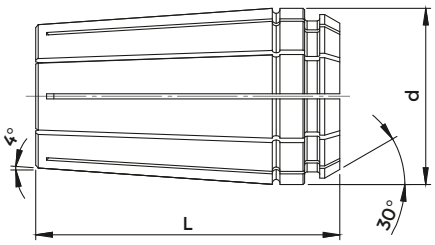

TG

COD.	DESCRIPTION	d	L	RANGE	CLAMPING	EINHEITS
1250	TG 75	27,0	46,9	2 ÷ 16	mm 0,5	420E
1251	TG 100	35,0	60,4	3 ÷ 25	mm 0,5	464E
1252	TG 150	50,8	76,2	10 ÷ 38	mm 0,5	466E

BAKUER COLLETS

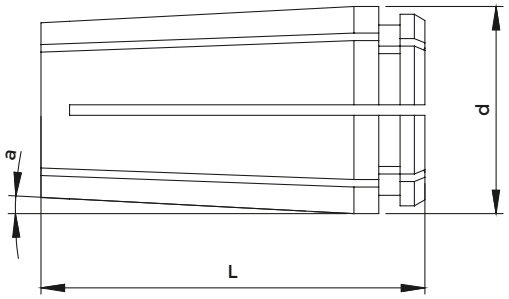

COD.	RANGE	d	L	a
0736	4,0 ÷ 16,0	25,6	48	3°
0737	6,0 ÷ 20,0	29,6	54	3°
0738	8,0 ÷ 25,0	35,7	60	3°

443E COLLETS

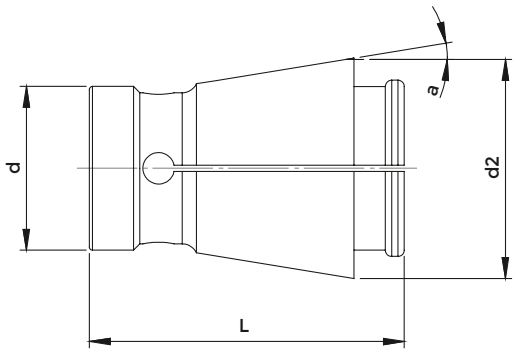

COD.	RANGE	d	d2	L	a	EINHEITS
0772	3,0 ÷ 20	26	35	50	9° 15'	443E

BRIDGEPORT R8 COLLETS

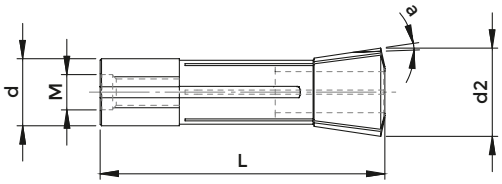

COD.	RANGE	d	d2	L	a	M	EINHEITS
0716	2,0 ÷ 22	24,12	32	106	8° 35'	7/16 - 20"	369E

DIN 6343 COLLETS - ROUND BORE EXECUTIONS

GROOVED INSIDE ROUND COLLET
starting from ø 8 mm

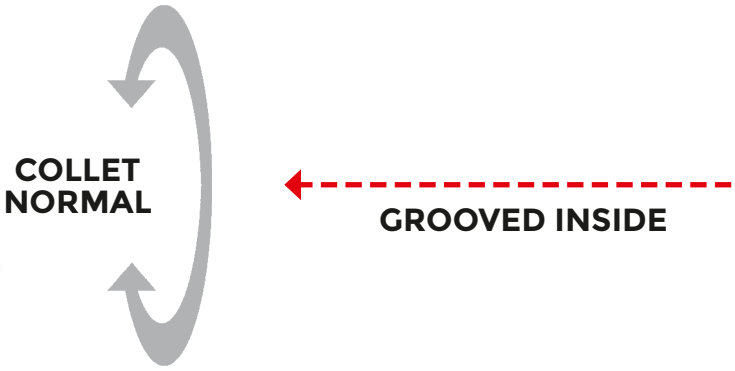

CHARACTERISTIC:

- Drilling Axial seal

Example for Order: 173E Grooved = Art. 0709

SERRATED INSIDE ROUND COLLET
starting from ø 8 mm

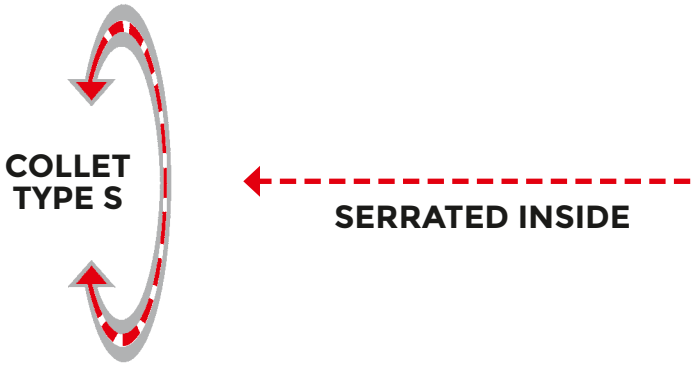

CHARACTERISTIC:

- Drilling Axial seal + rotatory seal as twisting moment

Example for Order: 173E Serrated = Art. 0709 **S**

SMOOTH INSIDE ROUND COLLET
all the diameters

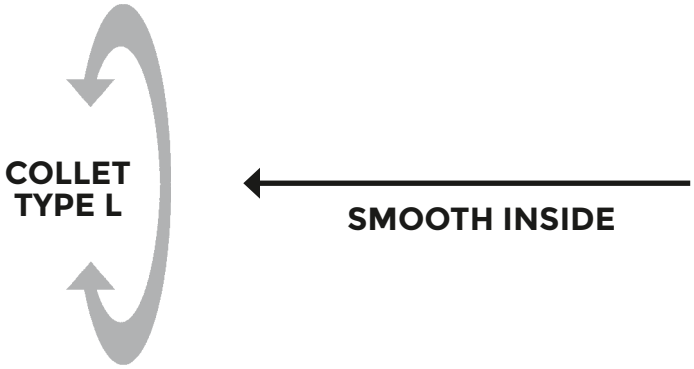

CHARACTERISTIC:

- Suitable to lock finished diameter, doesn't engrave material surface

Example for Order: 173E Smooth = Art. 0709 **L**

SINGLE CONE CLAMPING COLLETS

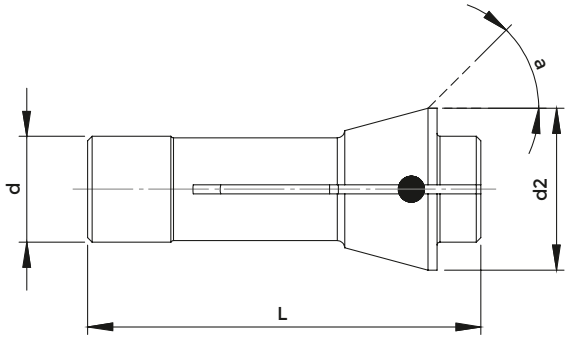

DIN 6343

COD. ●	COD. ⬢	COD. ■	d	d2	L	a	MAX ●	MAX ⬢	MAX ■	EINHEITS
0721	-	-	8	12	42	16°	6,5	-	-	101E
0725	0949	5000	10	15,5	47,5	20°	8,0	6,0	5,0	109E
0940	0941	0943	13	19	64	16°	10,0	8,0	7,0	116E
0740	0741	0742	14	18	46	13°	10,0	9,0	8,0	117E
0722	0723	0724	15	21	64	16°	12,0	10,0	9,0	120E
0954	0955	0956	20	26	54	15°	16,0	12,0	10,0	136E
5299	5300	5301	20	27,5	60	15°	17,0	15,0	12,0	1299E
0937	0938	0939	20	28	67	16°	16,0	14,0	11,0	138E
0705	0707	0706	22	30	55	15°	18,0	14,0	12,0	140E
0717	0719	0718	25	35	77	16°	20,0	17,0	15,0	145E
0901	0902	0903	27	38	72,7	15°	22,0	20,0	16,0	147E
0713	0715	0714	28	38	70	15°	23,0	20,0	17,0	148E
0931	0932	0933	30	38	65	15°	26,0	22,0	18,0	1446E
0727	0728	0729	30	42	80	16°	25,0	23,0	19,0	157E
0701	0703	0702	32	45	75	15°	26,0	24,0	20,0	161E
0615	0616	0617	35	43	70	15°	25,0	24,0	20,0	162E
0764	0766	0765	35	48	80	15°	30,0	27,0	22,0	163E
0970	0972	0973	37	47	92	16°	32,0	27,0	22,0	1536E
0837	0839	0838	38	50,3	86	15°	32,0	28,0	25,0	-
0919	0920	0921	38,1	49	107,5	15°	32,0	27,0	22,0	164E
0861	0862	0863	42	55	94	15°	37,0	32,0	26,0	171E
0709	0711	0710	48	60	94	15°	42,0	38,0	30,0	173E
2424	2425	2426	58	70	94	15°	52,0	45,0	36,0	177E
0759	0760	0761	66	84	110	15°	60,0	52,0	42,0	185E

For round collets, the article refers to the execution with grooved inside. For the smooth inside add the letter L ,
for the serrated inside add the letter S. See previous page

ACCESSORIES

Art. 0018 Woodruff key mm 5x6,5

EMERGENCY COLLETS

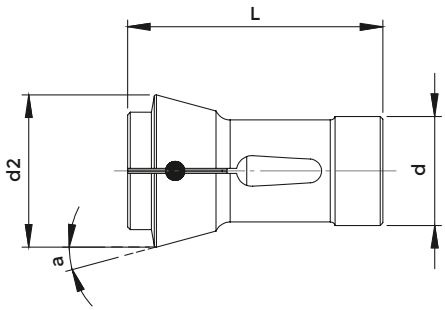

DIN 6343

COD.	d	d2	L	a	EINHEITS
0717EC	25	35	77	16°	145E
0701EC	32	45	75	15°	161E
0970EC	37	47	92	16°	1536E
0709EC	48	60	94	15°	173E
2424EC	58	70	94	15°	177E
0759EC	66	84	110	15°	185E

Emergency collets can be finished by the customer
with the diameter or the desired shape thanks to the workable front.
The supply includes the register pins useful for positioning in the spindle.

DOUBLE CONE CLAMPING COLLETS

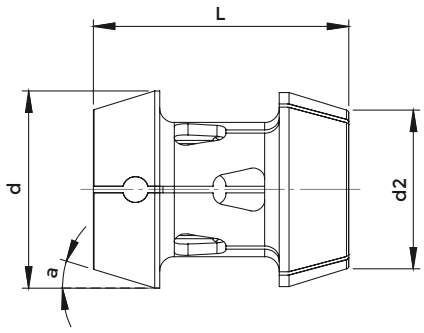

DIN 6343

COD. ●	COD. ⬢	COD. ■	d	L	d2	a	MAX ●	MAX ⬢	MAX ■
0739	0757	0758	60,0	80	49,0	17°	45	38	30
0756	0762	0763	71,6	100	60,0	17°	55	46	38
0927	0928	5053	91,0	100	80,0	17°	70	60	50
0892	0894	0899	108,0	105	95,0	17°	80	68	56

ACCESSORIES

Art. 0018 Woodruff key mm 5x6,5

DRAWN BACK COLLETS WITH EXTERNAL THREAD

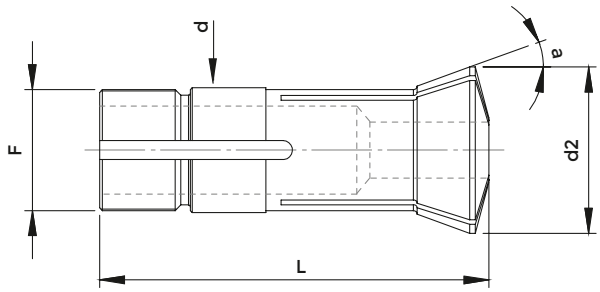

DIN 6343

COD. ●	COD. ⬢	COD. ■	d	d2	L	a	F	MAX ●	W	EINHEITS
0948	-	-	12,0	16,0	46	15°	11,75 x 1,25 45/5°	10	W 12	318E
0750	-	-	15,0	21,5	55,00	20°	M 13 x 1,00	13	-	324E
0800	-	-	20,0	26,3	73,00	15°	19,70 x 1,66 45/5°	20	W 20	349E
0966	-	-	20,0	28,00	122,00	17° 30'	19,70 x 2,00 45/5°	20	-	355E
0751	-	-	25,0	33,5	88,00	16°	M 23 x 1,00	22	-	363E
0674	-	-	25,0	33,7	97,6	15°	24,70 x 15 f " 45/5°	25	W 25	364E
5522	5530	5580	31,75	37,3	87	10° 03'	31,40 x 20 f " 60°	26	W 31,75	385E

DRAWBACK COLLETS WITH EXTERNAL AND INTERNAL THREAD

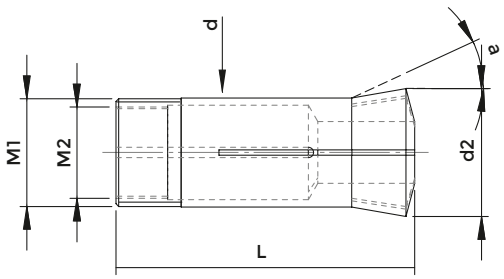

5C

COD. ●	DESCRIPTION	d	d2	L	a	M1	M2	MAX ●
5523	5C	31,75	37,3	87	10°03'	31,4 x 20 f " 60°	26,59 x 24 f "	26

CLAMPING SLEEVES FOR CUCCHI BAR-FEEDERS

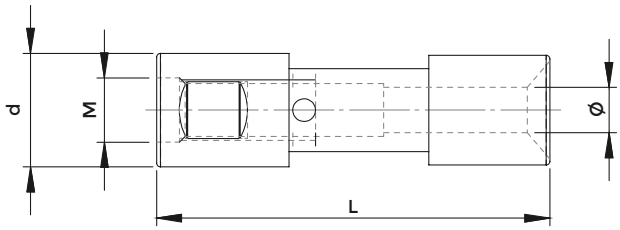

COD. ●	d	L	MIN ●	MAX ●	M DX
0591	20,0	59	3	18,0	M 10 x 1 DX
0591	22,0	59	19	20,0	M 10 x 1 DX
0904	40,0	70	6	37,0	M 25 x 1,5 DX
0904	42,0	70	38	39,0	M 25 x 1,5 DX
0935	46,0	72	37	42,0	M 25 x 1,5 DX
0945	60,0	80	30	55,0	M 25 x 1,5 DX
0708	65,0	80	55	60,0	M 25 x 1,5 DX
0708	69,5	80	61	65,0	M 25 x 1,5 DX
0708	75,0	80	66	70,0	M 25 x 1,5 DX

COD. ●	d	L	MIN ●	MAX ●	M SX
0607	19,0	60	4	16,0	M 10 x 1 SX
0607	20,0	60	17	18,0	M 10 x 1 SX
0653	37,0	70	10	34,0	M 25 x 1,5 SX
0653	39,0	70	35	36,0	M 25 x 1,5 SX
0653	41,0	70	37	39,0	M 25 x 1,5 SX
0654	47,0	70	14	43,0	M 30 x 1,5 SX
0654	49,0	70	44	45,0	M 30 x 1,5 SX

CLAMPING SLEEVES FOR IEMCA BAR-FEEDERS

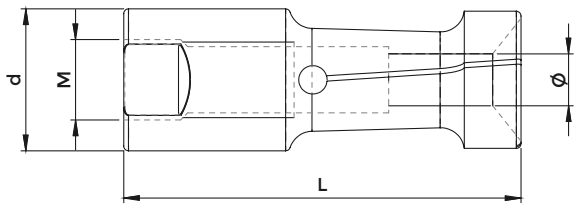

COD.	d	L	MIN	MAX	M DX
0594	7,5	40	2	6,5	M 5 x 0,5 DX
0897	10,0	40	2	8,5	M 6 x 0,75 DX
0593	12,0	42	2	10,5	M 7 x 0,75 DX
0592	15,0	42	2	13,5	M 8 x 1 DX
0591	20,0	59	3	18,0	M 10 x 1 DX
0591	22,0	59	19	20,0	M 10 x 1 DX
0891	25,0	59	4	23,0	M 10 x 1 DX
0823	30,0	65	8	28,0	M 10 x 1 DX
0823	32,0	65	29	30,0	M 10 x 1 DX
0904	40,0	70	6	37,0	M 25 x 1,5 DX
0904	42,0	70	38	39,0	M 25 x 1,5 DX
0935	46,0	72	37	42,0	M 25 x 1,5 DX
0945	60,0	80	30	55,0	M 25 x 1,5 DX
0708	65,0	80	55	60,0	M 25 x 1,5 DX
0708	69,5	80	61	65,0	M 25 x 1,5 DX
0708	75,0	80	66	70,0	M 25 x 1,5 DX

NIPLEX REDUCTIONS FOR IEMCA BAR-FEEDERS

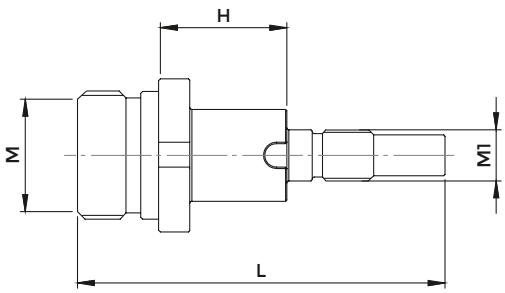

COD.	L	H	M DX	M1 DX
1260	72	26	M 25 x 1,5 DX	M 10 x 1 DX

CLAMPING SLEEVES FOR TOP AUTOMAZIONI BAR-FEEDERS

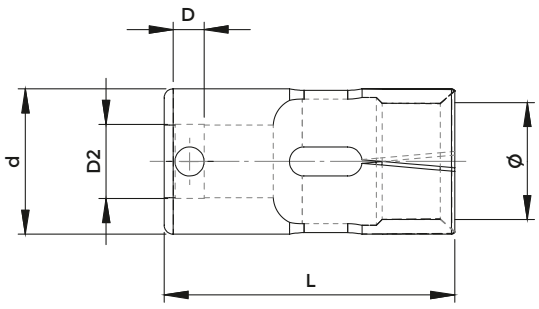

COD.	d	L	MIN	MAX	D	D2
9700	18	80	4	13	5	14
9701	20	80	5	17	5	14
9702	25	80	15	22	5	14
9703	30	80	20	28	8	20
9704	35	80	26	30	8	20
9705	40	80	30	38	8	20
9706	45	80	35	42	8	20
9707	50	80	40	47	8	20
9708	55	80	45	52	8	20
9709	60	80	30	55	8	20
9710	65	80	55	60	8	20
9711	70	80	61	65	8	20
9712	75	80	66	70	8	20
9713	75	80	66	70	8	30
9714	80	80	71	75	8	30
9715	85	95	76	80	8	35
9716	90	95	81	85	8	35
9717	95	95	86	90	8	35
9718	100	95	91	95	8	35

VULKOLLAN WORKABLE EMERGENCY CLAMPING SLEEVES FOR TOP AUTOMAZIONI BAR-FEEDERS

Workable emergency collets can be finished by the customer with the desired diameter thanks to the VULKOLLAN inner part.

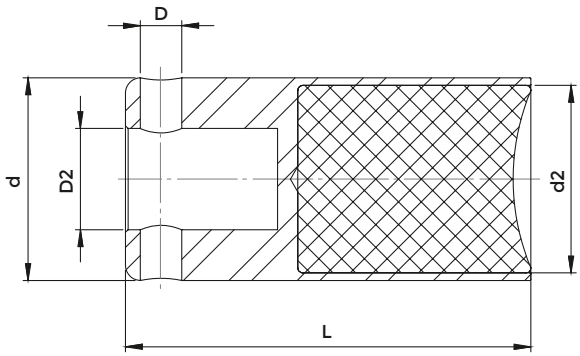

COD.	d	d2	L	D	D2
9502	14,9	12,9	80	5	10
9503	19	17	80	5	14
9504	24	22	80	5	20
9504	29	27	80	8	20
9504	31	29	80	8	20
9504	34	32	80	8	20
9504	35	33	80	8	20
9504	37	35	80	8	20
9504	39	37	80	8	20
9504	41	39	80	8	20
9504	44	42	80	8	20
9504	49	47	80	8	20
9504	51	49	80	8	20
9504	54	52	80	8	20
9504	59	57	80	8	20
9504	61	59	80	8	20
9504	64	62	80	8	20
9504	69	67	80	8	20
9505	71	69	80	8	30
9505	74	72	80	8	30
9505	79	77	80	8	30
9505	81	79	80	8	30
9505	84	82	80	8	30
9505	89	87	80	8	30
9505	94	92	80	8	30
9505	99	97	80	8	30
9505	109	107	80	8	30

CLAMPING SLEEVES TOP AUTOMAZIONI BAR-FEEDERS FOR SLIDING HEADSTOCK LATHES

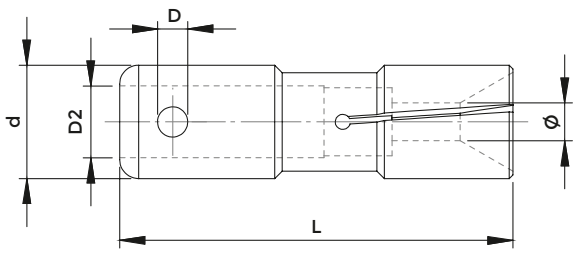

COD. ●	d	L	MAX ●	D	D2
9522	15	52	3 ÷ 13	5	10
9522	18	52	14 ÷ 16	5	10
9523	20	52	17 ÷ 18	5	14
9523	22	52	19	5	14
9523	23	52	20	5	14
9523	25	52	21 ÷ 22	5	14
9523	27	52	23	5	14
9523	28	52	24	5	14
9523	29	52	25	5	14
9523	30	52	26	5	14

NIPLEX FOR TOP AUTOMAZIONI BAR-FEEDERS

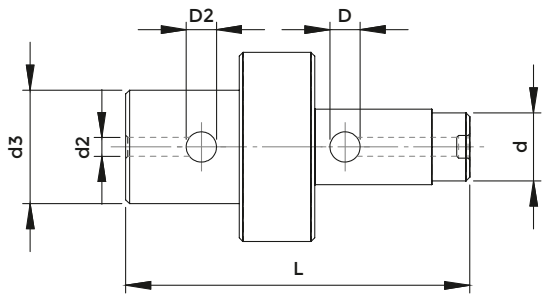

COD.	d	d2	d3	D	D2	L
9506	10	14	18	5	5	79
9507	14	14	19	5	5	79
9508	14	20	30	5	8	91
9509	14	25	35	5	8	91
9510	14	30	50	5	8	91
9511	20	20	30	8	8	91
9512	20	25	35	8	8	91
9513	20	30	50	8	8	91
9514	30	30	50	8	8	91
9524	35	30	70	8	8	81

COLLET LOCKING PINS

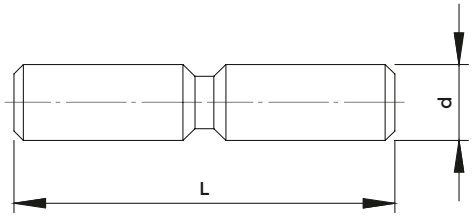

COD.	d	d2
9515	5	15
9516	5	19
9517	5	24
9525	5	27
9526	5	35
9518	8	30
9519	8	40
9520	8	45
9521	8	60

CLAMPING SLEEVES FOR OTHER BAR-FEEDERS

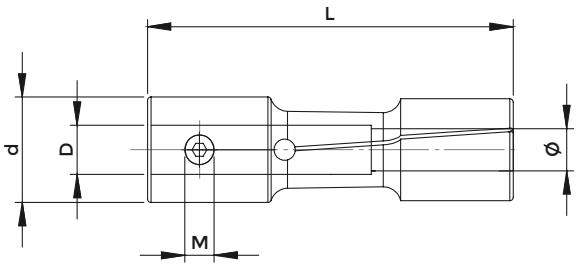

COD. ●	d	L	D	MIN ●	MAX ●	M	EINHEITS
1644	42	90	20 - H7	6,00	39,0	M 8	-

UNIVERSAL REDUCTION SLEEVES WITHOUT STOP

FIG. 1

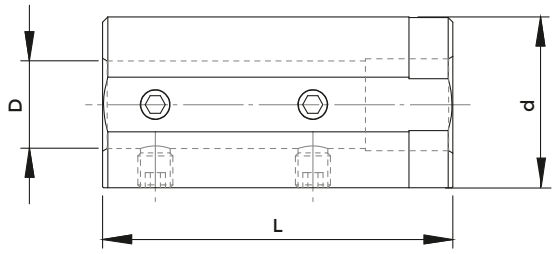

FIG. 2

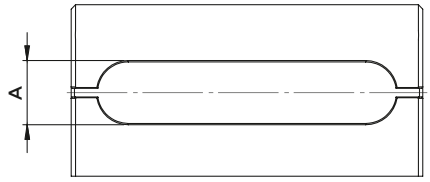

E 2.1 - E 2.2

COD.	DESCRIPTION	d	D	L	A	FIG.	SCREW
E2-1 20X06	E 2.1 - 20 x 6	20	6	60	-	1	0365
E2-1 20X8	E 2.1 - 20 x 8	20	8	60	-	1	0368
E2-1 20X10	E 2.1 - 20 x 10	20	10	60	-	1	0367
E2-1 20X12	E 2.1 - 20 x 12	20	12	60	-	1	0367
E2-1 25X06	E 2.1 - 25 x 6	25	6	60	-	1	0365
E2-1 25X8	E 2.1 - 25 x 8	25	8	60	-	1	811-106015
E2-1 25X10	E 2.1 - 25 x 10	25	10	60	-	1	811-106015
E2-1 25X12	E 2.1 - 25 x 12	25	12	60	-	1	0368
E2-1 25X14	E 2.1 - 25 x 14	25	14	60	-	1	0367
4318	E 2.2 - 25 x 16	25	16	60	9	2	-
E2-1 32X06	E 2.1 - 32 x 6	32	6	70	-	1	0366
E2-1 32X8	E 2.1 - 32 x 8	32	8	70	-	1	811-106001
E2-1 32X10	E 2.1 - 32 x 10	32	10	70	-	1	811-106001
E2-1 32X12	E 2.1 - 32 x 12	32	12	70	-	1	0370
E2-1 32X14	E 2.1 - 32 x 14	32	14	70	-	1	811-106015
E2-1 32X16	E 2.1 - 32 x 16	32	16	70	-	1	811-106015
2841	E 2.1 - 32 x 18	32	18	70	-	1	811-106015
E2-1 32X20	E 2.1 - 32 x 20	32	20	70	-	1	811-106036
E2-2 32X25	E 2.2 - 32 x 25	32	25	70	14	2	-
E2-1 40X06	E 2.1 - 40 x 6	40	6	80	-	1	0366
E2-1 40X08	E 2.1 - 40 x 8	40	8	80	-	1	811-102114
E2-1 40X10	E 2.1 - 40 x 10	40	10	80	-	1	811-102020
E2-1 40X12	E 2.1 - 40 x 12	40	12	80	-	1	811-102020
E2-1 40X14	E 2.1 - 40 x 14	40	14	80	-	1	811-102020
E2-1 40X16	E 2.1 - 40 x 16	40	16	80	-	1	811-106001
2847	E 2.1 - 40 x 18	40	18	80	-	1	811-106001
E2-1 40X20	E 2.1 - 40 x 20	40	20	80	-	1	811-102026
E2-1 40X25	E 2.1 - 40 x 25	40	25	80	-	1	811-106036
E2-2 40X32	E 2.2 - 40 x 32	40	32	80	14	2	-
E2-1 50X12	E 2.1 - 50 x 12	50	12	90	-	1	811-102114
7062	E 2.1 - 50 x 14	50	14	90	-	1	811-102114
E2-1 50X16	E 2.1 - 50 x 16	50	16	90	-	1	811-102028
2792	E 2.1 - 50 x 18	50	18	90	-	1	811-102028
E2-1 50X20	E 2.1 - 50 x 20	50	20	90	-	1	811-102028
E2-1 50X25	E 2.1 - 50 x 25	50	25	90	-	1	811-106002
E2-1 50X32	E 2.1 - 50 x 32	50	32	90	-	1	811-102026
E2-2 50X40	E 2.2 - 50 x 40	50	40	90	14	2	-
E2-1 60X16	E 2.1 - 60 x 16	60	16	160	-	1	811-102030
E2-1 60X20	E 2.1 - 60 x 20	60	20	160	-	1	811-102030
E2-1 60X25	E 2.1 - 60 x 25	60	25	160	-	1	811-102037
E2-1 60X32	E 2.1 - 60 x 32	60	32	160	-	1	811-106004
E2-1 60X40	E 2.1 - 60 x 40	60	40	160	-	1	0385

UNIVERSAL REDUCTION SLEEVES WITH STOP

FIG. 1

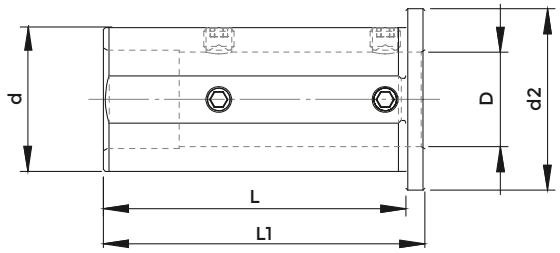

FIG. 2

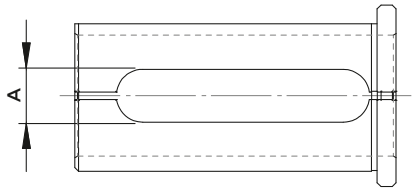

EG.1 - EG.2

COD.	DESCRIPTION	d	D	L	L1	d2	A	FIG.	SCREW
5964	EG.1 - 20 x 6	20	6	50	55	28	-	1	0365
5965	EG.1 - 20 x 8	20	8	50	55	28	-	1	0368
5966	EG.1 - 20 x 10	20	10	50	55	28	-	1	0367
5967	EG.1 - 20 x 12	20	12	50	55	28	-	1	0367
5994	EG.2 - 20 x 14	20	14	50	55	28	9	2	-
115-62573	EG.1 - 25 x 6	25	6	60	65	33	-	1	0365
115-62538	EG.1 - 25 x 8	25	8	60	65	33	-	1	811-106015
115-62539	EG.1 - 25 x 10	25	10	60	65	33	-	1	811-106015
115-62540	EG.1 - 25 x 12	25	12	60	65	33	-	1	0368
5972	EG.1 - 25 x 14	25	14	60	65	33	-	1	0367
5995	EG.2 - 25 x 16	25	16	60	65	33	9	2	-
5996	EG.2 - 25 x 18	25	18	60	65	33	9	2	-
5973	EG.1 - 32 x 6	32	6	70	75	40	-	1	0366
5974	EG.1 - 32 x 8	32	8	70	75	40	-	1	811-106001
5975	EG.1 - 32 x 10	32	10	70	75	40	-	1	811-106001
5976	EG.1 - 32 x 12	32	12	70	75	40	-	1	0370
5977	EG.1 - 32 x 14	32	14	70	75	40	-	1	811-106015
D32L70D16	EG.1 - 32 x 16	32	16	70	75	40	-	1	811-106015
5979	EG.1 - 32 x 18	32	18	70	75	40	-	1	811-106015
D32L70D20	EG.1 - 32 x 20	32	20	70	75	40	-	1	811-106036
D32L70D25	EG.2 - 32 x 25	32	25	70	75	40	14	2	-
5960	EG.1 - 40 x 6	40	6	80	85	48	-	1	0366
165-64135	EG.1 - 40 x 8	40	8	80	85	48	-	1	811-102114
5982	EG.1 - 40 x 10	40	10	80	85	48	-	1	811-102020
5983	EG.1 - 40 x 12	40	12	80	85	48	-	1	811-102020
5984	EG.1 - 40 x 14	40	14	80	85	48	-	1	811-102020
G5985	EG.1 - 40 x 16	40	16	80	85	48	-	1	811-106001
5986	EG.1 - 40 x 18	40	18	80	85	48	-	1	811-106001
G5987	EG.1 - 40 x 20	40	20	80	85	48	-	1	811-102026
G5988	EG.1 - 40 x 25	40	25	80	85	48	-	1	811-106036
5998	EG.2 - 40 x 32	40	32	80	85	48	14	2	-
7063	EG.1 - 50 x 8	50	8	90	95	58	-	1	811-102114
7064	EG.1 - 50 x 10	50	10	90	95	58	-	1	811-102020
7065	EG.1 - 50 x 12	50	12	90	95	58	-	1	811-102020
7066	EG.1 - 50 x 14	50	14	90	95	58	-	1	811-102020
5989	EG.1 - 50 x 16	50	16	90	95	58	-	1	811-102028
5990	EG.1 - 50 x 18	50	18	90	95	58	-	1	811-102028
5991	EG.1 - 50 x 20	50	20	90	95	58	-	1	811-102028
5992	EG.1 - 50 x 25	50	25	90	95	58	-	1	811-106002
5993	EG.1 - 50 x 32	50	32	90	95	58	-	1	811-102026
5999	EG.2 - 50 x 40	50	40	90	95	58	14	2	-

EXTENDED UNIVERSAL REDUCTION SLEEVES WITH STOP

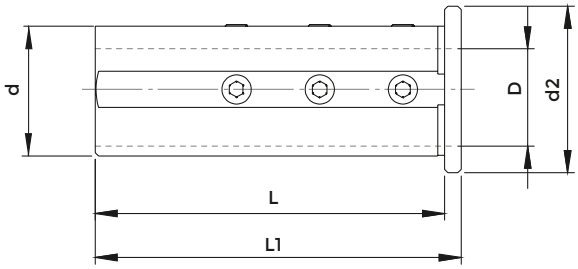

EG.3

COD.	DESCRIPTION	d	D	L	L1	d2	SCREW
165-63222	EG. 3 - 32 x 6	32	6	85	90	40	0366
115-63260	EG. 3 - 32 x 8	32	8	85	90	40	811-106001
115-63261	EG. 3 - 32 x 10	32	10	85	90	40	0370
115-63211	EG. 3 - 32 x 12	32	12	85	90	40	0370
7042	EG. 3 - 32 x 14	32	14	85	90	40	0370
115-63212	EG. 3 - 32 x 16	32	16	85	90	40	811-106015
7043	EG. 3 - 32 x 18	32	18	85	90	40	811-106015
115-63213	EG. 3 - 32 x 20	32	20	85	90	40	0367
165-64074	EG. 3 - 40 x 6	40	6	105	110	50	0366
115-64043	EG. 3 - 40 x 8	40	8	105	110	50	811-102114
115-64044	EG. 3 - 40 x 10	40	10	105	110	50	811-102020
115-64045	EG. 3 - 40 x 12	40	12	105	110	50	811-102020
5918	EG. 3 - 40 x 14	40	14	105	110	50	811-102020
115-64046	EG. 3 - 40 x 16	40	16	105	110	50	811-106002
5919	EG. 3 - 40 x 18	40	18	105	110	50	811-106002
115-64047	EG. 3 - 40 x 20	40	20	105	110	50	811-102026
115-64048	EG. 3 - 40 x 25	40	25	105	110	50	811-106036
115-65053	EG. 3 - 50 x 12	50	12	125	130	60	811-102029
7044	EG. 3 - 50 x 14	50	14	125	130	60	811-102029
115-65013	EG. 3 - 50 x 16	50	16	125	130	60	811-102028
7045	EG. 3 - 50 x 18	50	18	125	130	60	811-102028
115-65014	EG. 3 - 50 x 20	50	20	125	130	60	811-102028
115-65015	EG. 3 - 50 x 25	50	25	125	130	60	811-106002
115-65016	EG. 3 - 50 x 32	50	32	125	130	60	811-102026
115-66017	EG. 3 - 60 x 20	60	20	135	140	70	811-102038
115-66018	EG. 3 - 60 x 25	60	25	135	140	70	811-102037
115-66019	EG. 3 - 60 x 32	60	32	135	140	70	811-106004
115-66020	EG. 3 - 60 x 40	60	40	135	140	70	0385
115-68006	EG. 3 - 80 x 25	80	25	145	150	90	811-106005
115-68007	EG. 3 - 80 x 32	80	32	145	150	90	811-106005
115-68008	EG. 3 - 80 x 40	80	40	145	150	90	811-106005
115-68009	EG. 3 - 80 x 50	80	50	145	150	90	811-106005

SLOTTED REDUCTION SLEEVES WITH STOP

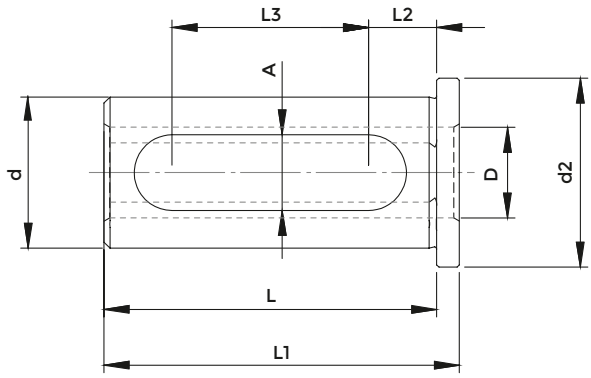

EG.5

COD.	DESCRIPTION	d	D	L	L1	L2	L3	A	d2
115-62027	EG. 5 - 20 x 8	20	8	44	47	9,5	25	11	25
115-62028	EG. 5 - 20 x 10	20	10	44	47	9,5	25	11	25
115-62029	EG. 5 - 20 x 12	20	12	44	47	9,5	25	11	25
8880	EG. 5 - 20 x 14	20	14	44	47	9,5	25	11	25
115-62030	EG. 5 - 20 x 16	20	16	44	47	9,5	25	11	25
8557	EG. 5 - 25 x 8	25	8	54	57	8,5	33	13	30
8558	EG. 5 - 25 x 10	25	10	54	57	8,5	33	13	30
8559	EG. 5 - 25 x 12	25	12	54	57	8,5	33	13	30
8560	EG. 5 - 25 x 14	25	14	54	57	8,5	33	13	30
8561	EG. 5 - 25 x 16	25	16	54	57	8,5	33	13	30
8562	EG. 5 - 25 x 18	25	18	54	57	8,5	33	13	30
8563	EG. 5 - 25 x 20	25	20	54	57	8,5	33	13	30
8564	EG. 5 - 32 x 8	32	8	64	68	8,5	42	13	37
8565	EG. 5 - 32 x 10	32	10	64	68	8,5	42	13	37
8566	EG. 5 - 32 x 12	32	12	64	68	8,5	42	13	37
8567	EG. 5 - 32 x 14	32	14	64	68	8,5	42	13	37
8568	EG. 5 - 32 x 16	32	16	64	68	8,5	42	13	37
8569	EG. 5 - 32 x 18	32	18	64	68	8,5	42	13	37
8570	EG. 5 - 32 x 20	32	20	64	68	8,5	42	13	37
8571	EG. 5 - 32 x 25	32	25	64	68	8,5	42	13	37
8835	EG. 5 - 40 x 12	40	12	74	79	9	51	14	45
8836	EG. 5 - 40 x 14	40	14	74	79	9	51	14	45
8837	EG. 5 - 40 x 16	40	16	74	79	9	51	14	45
8838	EG. 5 - 40 x 18	40	18	74	79	9	51	14	45
165-64095	EG. 5 - 40 x 20	40	20	74	79	9	51	14	45
165-64096	EG. 5 - 40 x 25	40	25	74	79	9	51	14	45
165-64097	EG. 5 - 40 x 32	40	32	74	79	9	51	14	45

LONG TYPE WITH DOUBLE SLOT

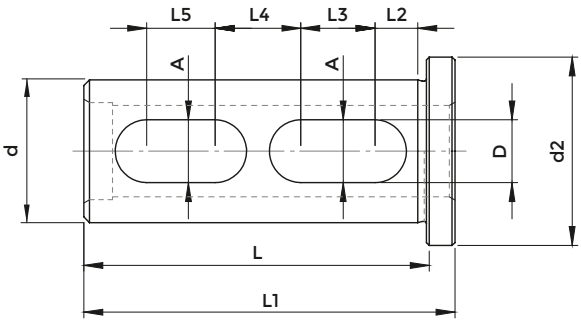

EG.4

COD.	DESCRIPTION	d	D	L	L1	L2	L3	L4	L5	A	d2
115-62541	EG. 4 - 25 x 16	25	16	60	65	9	13	15	12	11	33
115-63214	EG. 4 - 32 x 25	32	25	85	90	9	25	18	22	11	40
115-64049	EG. 4 - 40 x 32	40	32	105	110	10	35	20	28	13	50
115-65017	EG. 4 - 50 x 40	50	40	125	130	10	45	20	37	13	60
115-66021	EG. 4 - 60 x 50	60	50	135	140	15	40	28	28	13	70
115-68010	EG. 4 - 80 x 60	80	60	145	150	25	30	25	15	14	90

SLOTTED REDUCTION SLEEVES WITH GRAIN ON THE STOP

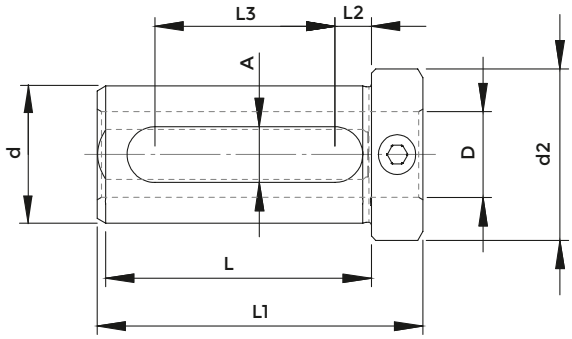

EG.6

COD.	DESCRIPTION	d	D	L	L1	L2	L3	A	d2	SCREW
115-62044	EG. 6 - 20 x 8	20	8	49	59	7,5	29	11	27	0370
115-62045	EG. 6 - 20 x 10	20	10	49	59	7,5	29	11	27	0370
115-62046	EG. 6 - 20 x 12	20	12	49	59	7,5	29	11	27	0370
8757	EG. 6 - 20 x 14	20	14	49	59	7,5	29	11	27	0370
115-62047	EG. 6 - 20 x 16	20	16	49	59	7,5	29	11	27	0368
165-62545	EG. 6 - 25 x 12	25	12	54	66	8,5	32	13	32	811-102028
8760	EG. 6 - 25 x 14	25	14	54	66	8,5	32	13	32	811-106036
165-62547	EG. 6 - 25 x 16	25	16	54	66	8,5	32	13	32	811-106036
8762	EG. 6 - 25 x 18	25	18	54	66	8,5	32	13	32	811-106036
165-62549	EG. 6 - 25 x 20	25	20	54	66	8,5	32	13	32	811-106036
165-63347	EG. 6 - 32 x 16	32	16	64	76	8,5	42	13	39	811-102028
8765	EG. 6 - 32 x 18	32	18	64	76	8,5	42	13	39	811-102028
165-63349	EG. 6 - 32 x 20	32	20	64	76	8,5	42	13	39	811-106036
165-63350	EG. 6 - 32 x 25	32	25	64	76	8,5	42	13	39	811-106036
165-64241	EG. 6 - 40 x 16	40	16	74	88	9	51	14	48	811-102037
8769	EG. 6 - 40 x 18	40	18	74	88	9	51	14	48	811-102037
165-64243	EG. 6 - 40 x 20	40	20	74	88	9	51	14	48	811-102037
165-64244	EG. 6 - 40 x 25	40	25	74	88	9	51	14	48	811-106003
165-64245	EG. 6 - 40 x 32	40	32	74	88	9	51	14	48	811-106003
165-65017	EG. 6 - 50 x 25	50	25	84	98	9	61	14	59	811-102037
165-65018	EG. 6 - 50 x 32	50	32	84	98	9	61	14	59	811-102037
165-65019	EG. 6 - 50 x 40	50	40	84	98	9	61	14	59	811-106003
165-66056	EG. 6 - 60 x 25	60	25	94	108	9	71	14	69	811-102037
165-66057	EG. 6 - 60 x 32	60	32	94	108	9	71	14	69	811-102037
165-66058	EG. 6 - 60 x 40	60	40	94	108	9	71	14	69	811-102037
165-66059	EG. 6 - 60 x 50	60	50	94	108	9	71	14	69	811-106003

REDUCTION SLEEVES WITH EXTENSION

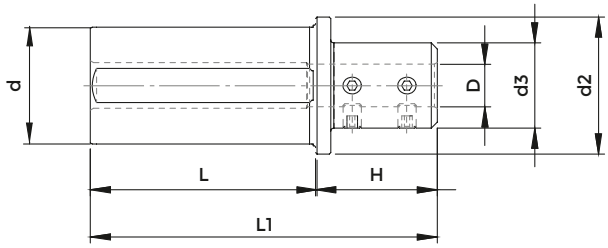

EG.7

COD.	DESCRIPTION	d	D	L	H	L2	d2	d3	SCREW
9567	EG. 7 - 25 x 6	25	6	54	30	84	30	20	0365
9568	EG. 7 - 25 x 8	25	8	54	30	84	30	22	0370
9569	EG. 7 - 25 x 10	25	10	54	30	84	30	24	0370
9570	EG. 7 - 25 x 12	25	12	54	30	84	30	26	0370
9571	EG. 7 - 25 x 14	25	14	54	30	84	30	28	0370
9572	EG. 7 - 25 x 16	25	16	54	30	84	30	30	0370
9573	EG. 7 - 32 x 6	32	6	64	30	94	37	20	0365
9574	EG. 7 - 32 x 8	32	8	64	30	94	37	22	0370
9575	EG. 7 - 32 x 10	32	10	64	30	94	37	24	0370
9576	EG. 7 - 32 x 12	32	12	64	30	94	37	26	0370
9577	EG. 7 - 32 x 14	32	14	64	30	94	37	28	0370
9578	EG. 7 - 32 x 16	32	16	64	30	94	37	30	0370
9579	EG. 7 - 32 x 18	32	18	64	30	94	37	32	0370
9580	EG. 7 - 32 x 20	32	20	64	30	94	37	34	0370
9581	EG. 7 - 40 x 6	40	6	74	40	114	45	20	0365
9582	EG. 7 - 40 x 8	40	8	74	40	114	45	22	0370
9583	EG. 7 - 40 x 10	40	10	74	40	114	45	24	0370
9584	EG. 7 - 40 x 12	40	12	74	40	114	45	26	0370
9585	EG. 7 - 40 x 14	40	14	74	40	114	45	28	0370
9586	EG. 7 - 40 x 16	40	16	74	40	114	45	30	0370
9587	EG. 7 - 40 x 18	40	18	74	40	114	45	32	0370
9588	EG. 7 - 40 x 20	40	20	74	40	114	45	34	811-106036
9589	EG. 7 - 40 x 25	40	25	74	40	114	45	39	811-106036
9590	EG. 7 - 50 x 12	50	12	84	40	124	55	26	0370
9591	EG. 7 - 50 x 14	50	14	84	40	124	55	28	0370
9592	EG. 7 - 50 x 16	50	16	84	40	124	55	30	0370
9593	EG. 7 - 50 x 18	50	18	84	40	124	55	32	0370
9594	EG. 7 - 50 x 20	50	20	84	40	124	55	34	811-106036
9595	EG. 7 - 50 x 25	50	25	84	40	124	55	39	811-106036

SPLITTED REDUCTION SLEEVES WITH STOP - RZ TYPE

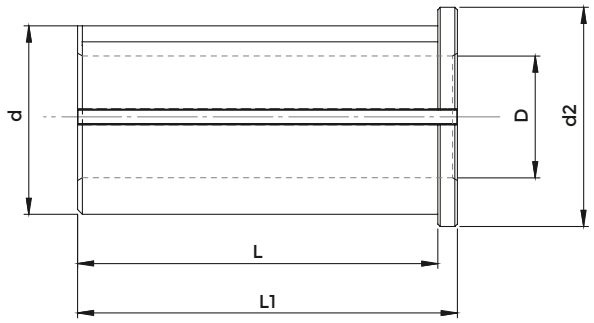

RZ

COD.	DESCRIPTION	d	D	L	L1	d2
5920	RZ - 20 x 8	20	8	36	40	25
RZ-20X10	RZ - 20 x 10	20	10	36	40	25
RZ-20X12	RZ - 20 x 12	20	12	36	40	25
RZ-20X14	RZ - 20 x 14	20	14	36	40	25
RZ-20X16	RZ - 20 x 16	20	16	36	40	25
RZ-25X08	RZ - 25 x 8	25	8	46	50	30
RZ-25X10	RZ - 25 x 10	25	10	46	50	30
RZ-25X12	RZ - 25 x 12	25	12	46	50	30
5928	RZ - 25 x 14	25	14	46	50	30
RZ-25X16	RZ - 25 x 16	25	16	46	50	30
5930	RZ - 25 x 18	25	18	46	50	30
RZ-25X20	RZ - 25 x 20	25	20	46	50	30
RZ-32X08	RZ - 32 x 8	32	8	56	60	37
RZ-32X10	RZ - 32 x 10	32	10	56	60	37
RZ-32X12	RZ - 32 x 12	32	12	56	60	37
5935	RZ - 32 x 14	32	14	56	60	37
RZ-32X16	RZ - 32 x 16	32	16	56	60	37
5937	RZ - 32 x 18	32	18	56	60	37
RZ-32X20	RZ - 32 x 20	32	20	56	60	37
RZ-32X25	RZ - 32 x 25	32	25	56	60	37
RZ-40X10	RZ - 40 x 10	40	10	74	78	45
RZ-40X12	RZ - 40 x 12	40	12	74	78	45
5943	RZ - 40 x 14	40	14	74	78	45
RZ-40X16	RZ - 40 x 16	40	16	74	78	45
5945	RZ - 40 x 18	40	18	74	78	45
RZ-40X20	RZ - 40 x 20	40	20	74	78	45
RZ-40X25	RZ - 40 x 25	40	25	74	78	45
RZ-40X32	RZ - 40 x 32	40	32	74	78	45
RZ-50X20	RZ - 50 x 20	50	20	84	88	55
RZ-50X25	RZ - 50 x 25	50	25	84	88	55
RZ-50X32	RZ - 50 x 32	50	32	84	88	55
RZ-50X40	RZ - 50 x 40	50	40	84	88	55
RZ-60X25	RZ - 60 x 25	60	25	88	92	65
RZ-60X32	RZ - 60 x 32	60	32	88	92	65
RZ-60X40	RZ - 60 x 40	60	40	88	92	65
RZ-60X50	RZ - 60 x 50	60	50	88	92	65

The double cut increases the bush elastic capacity reducing thus tool vibrations

GRINDED NOT HARDENED REDUCTION SLEEVES WITH STOP

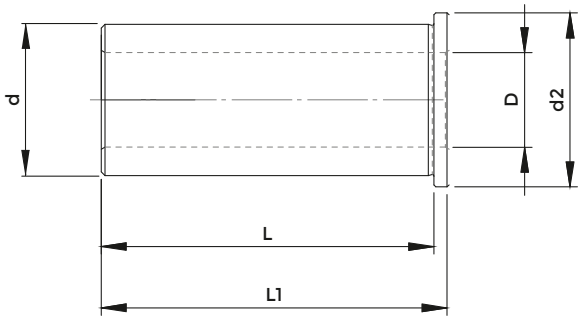

E2.LAV

COD.	DESCRIPTION	d	D	L	L1	d2
1509	E2 .LAV - 25 x 8	25	8	70	74	32
1511	E2 .LAV - 25 x 10	25	10	70	74	32
1513	E2 .LAV - 25 x 12	25	12	70	74	32
1517	E2 .LAV - 25 x 16	25	16	70	74	32
1519	E2 .LAV - 25 x 20	25	20	70	74	32
2284	E2 .LAV - 32 x 10	32	10	88	92	36
2286	E2 .LAV - 32 x 12	32	12	88	92	36
2289	E2 .LAV - 32 x 16	32	16	88	92	36
2291	E2 .LAV - 32 x 20	32	20	88	92	36
2293	E2 .LAV - 32 x 25	32	25	88	92	36
2440	E2 .LAV - 40 x 12	40	12	88	92	46
2442	E2 .LAV - 40 x 16	40	16	88	92	46
2446	E2 .LAV - 40 x 20	40	20	88	92	46
2460	E2 .LAV - 40 x 25	40	25	88	92	46
2466	E2 .LAV - 40 x 32	40	32	88	92	46

REDUCTION SLEEVES FOR BORING BAR HOLDERS

FIG. 1

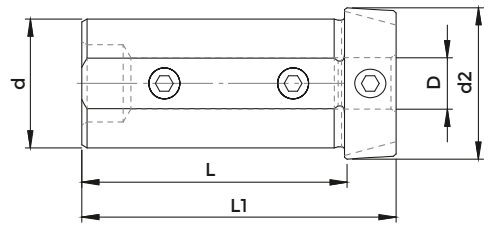

FIG. 2

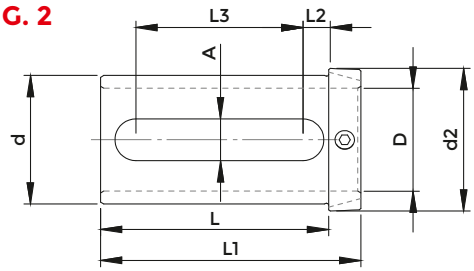

EG.R

COD.	DESCRIPTION	d	D	L	L1	L2	L3	A	d2	FIG.
9600	EG . R - 25 x 8	25	8	51	61	-	-	-	-	1
9601	EG . R - 25 x 10	25	10	51	61	-	-	-	-	1
9602	EG . R - 25 x 12	25	12	51	61	-	-	-	-	1
9603	EG . R - 25 x 14	25	14	51	61	-	-	-	-	1
9604	EG . R - 25 x 16	25	16	51	61	8	34	13	30	2
9605	EG . R - 25 x 18	25	18	51	61	8	34	13	30	2
165-62557	EG . R - 25 x 20	25	20	51	61	8	34	13	30	2
9607	EG . R - 32 x 8	32	8	57,5	67,5	-	-	-	-	1
9608	EG . R - 32 x 10	32	10	57,5	67,5	-	-	-	-	1
9609	EG . R - 32 x 12	32	12	57,5	67,5	-	-	-	-	1
9610	EG . R - 32 x 14	32	14	57,5	67,5	-	-	-	-	1
9611	EG . R - 32 x 16	32	16	57,5	67,5	8	40	13	37	2
9612	EG . R - 32 x 18	32	18	57,5	67,5	8	40	13	37	2
9613	EG . R - 32 x 20	32	20	57,5	67,5	8	40	13	37	2
9614	EG . R - 32 x 25	32	25	57,5	67,5	8	40	13	37	2
9615	EG . R - 40 x 8	40	8	71	81	-	-	-	-	1
9616	EG . R - 40 x 10	40	10	71	81	-	-	-	-	1
9617	EG . R - 40 x 12	40	12	71	81	-	-	-	-	1
9618	EG . R - 40 x 14	40	14	71	81	-	-	-	-	1
9619	EG . R - 40 x 16	40	16	71	81	8	52	13	45	2
9620	EG . R - 40 x 18	40	18	71	81	8	52	13	45	2
9621	EG . R - 40 x 20	40	20	71	81	8	52	13	45	2
9622	EG . R - 40 x 25	40	25	71	81	8	52	13	45	2
9623	EG . R - 40 x 32	40	32	71	81	8	52	13	45	2

Suitable for any boring bar (VDI, HSK, Polygonal, etc).
Stop shape avoids interference with coolant nozzles

MORSE TAPER REDUCTION SLEEVES WITHOUT STOP

FIG. 1

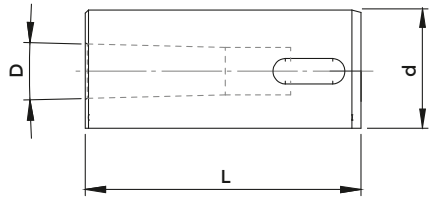

FIG. 2

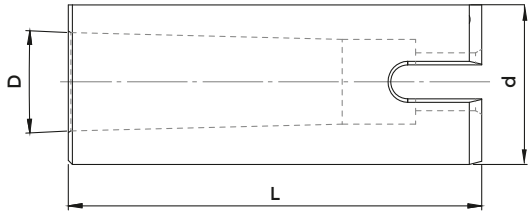

E 2.3

COD.	DESCRIPTION	d	CM	D	L	FIG.
E2-3 20X01	E 2.3 - 20 x 1	20	1	12,065	60	2
E2-3 20X2	E 2.3 - 20 x 2	20	2	17,78	90	1
5219	E 2.3 - 25 x 1	25	1	12,065	60	2
5220	E 2.3 - 25 x 2	25	2	17,78	90	1
E2-3 32X1	E 2.3 - 32 x 1	32	1	12,065	60	2
E2-3 32X2	E 2.3 - 32 x 2	32	2	17,78	90	1
E2-3 32X3	E 2.3 - 32 x 3	32	3	23,825	100	2
E2-3 40X2	E 2.3 - 40 x 2	40	2	17,78	90	1
E2-3 40X3	E 2.3 - 40 x 3	40	3	23,825	100	2
E2-3 40X4	E 2.3 - 40 x 4	40	4	31,267	120	2
E2-3 50X2	E 2.3 - 50 x 2	50	2	17,78	90	1
E2-3 50X3	E 2.3 - 50 x 3	50	3	23,825	100	2
E2-3 50X4	E 2.3 - 50 x 4	50	4	31,267	120	2
E2-3 60X3	E 2.3 - 60 x 3	60	3	23,825	160	1
E2-3 60X4	E 2.3 - 60 x 4	60	4	31,267	160	1
E2-3 60X5	E 2.3 - 60 x 5	60	5	44,399	160	2

MORSE TAPER REDUCTION SLEEVES WITH STOP

FIG. 1

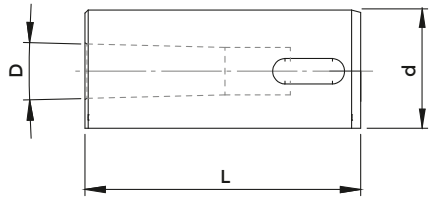

FIG. 2

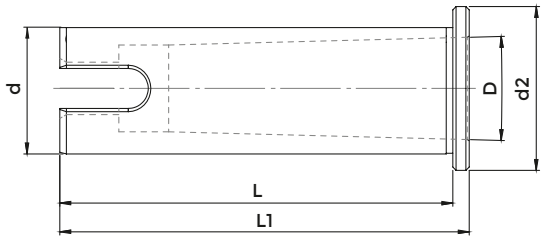

E 2.G6

COD.	DESCRIPTION	d	CM	D	L	L1	d2	FIG.
1722	E2.G6 - 20 x 1	20	1	12,065	65	70	28	2
1723	E2.G6 - 20 x 2	20	2	17,78	70	75	28	2
KMS-T22062	E2.G6 - 25 x 1	25	1	12,065	70	75	33	2
165-62517	E2.G6 - 25 x 2	25	2	17,78	70	75	33	2
E2-3 25X3	E2.G6 - 25 x 3	25	3	23,825	79	98	33	2
114-33208	E2.G6 - 32 x 1	32	1	12,065	85	90	40	1
114-33209	E2.G6 - 32 x 2	32	2	17,78	85	90	40	1
114-33210	E2.G6 - 32 x 3	32	3	23,825	95	100	40	2
114-34008	E2.G6 - 40 x 2	40	2	17,78	105	110	50	1
114-34009	E2.G6 - 40 x 3	40	3	23,825	105	110	50	1
114-34010	E2.G6 - 40 x 4	40	4	31,267	120	125	50	2
114-35004	E2.G6 - 50 x 2	50	2	17,78	125	130	63	1
114-35005	E2.G6 - 50 x 3	50	3	23,825	125	130	63	1
114-35006	E2.G6 - 50 x 4	50	4	31,267	125	130	63	1
114-36007	E2.G6 - 60 x 3	60	3	23,825	130	140	70	1
114-36008	E2.G6 - 60 x 4	60	4	31,267	130	140	70	1
114-36009	E2.G6 - 60 x 5	60	5	44,399	145	155	70	2

REDUCTION SLEEVES FOR BIGLIA ETC.

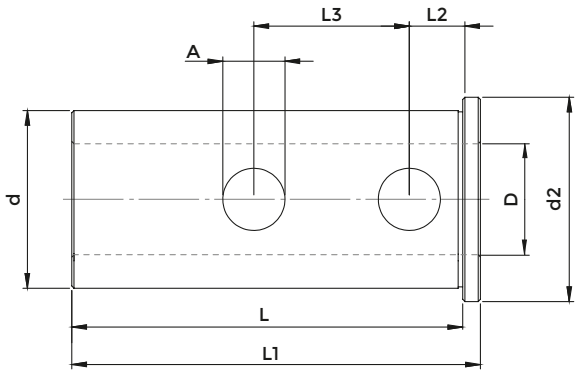

BG.1

COD.	DESCRIPTION	d	D	L	L1	L2	L3	A	d2
2823	BG.1 - 25 x 8	25	8	70	74	7	28	9	32
2824	BG.1 - 25 x 10	25	10	70	74	7	28	9	32
1064	BG.1 - 25 x 12	25	12	70	74	7	28	9	32
2198	BG.1 - 25 x 16	25	16	70	74	7	28	9	32
1212	BG.1 - 25 x 20	25	20	70	74	7	28	9	32
3229	BG.1 - 32 x 8	32	8	88	92	9	35	14	36
3230	BG.1 - 32 x 10	32	10	88	92	9	35	14	36
3231	BG.1 - 32 x 12	32	12	88	92	9	35	14	36
3232	BG.1 - 32 x 16	32	16	88	92	9	35	14	36
3233	BG.1 - 32 x 20	32	20	88	92	9	35	14	36
3234	BG.1 - 32 x 25	32	25	88	92	9	35	14	36
3240	BG.1 - 40 x 10	40	10	88	92	9	35	14	46
3239	BG.1 - 40 x 12	40	12	88	92	9	35	14	46
3238	BG.1 - 40 x 16	40	16	88	92	9	35	14	46
3235	BG.1 - 40 x 20	40	20	88	92	9	35	14	46
3236	BG.1 - 40 x 25	40	25	88	92	9	35	14	46
3237	BG.1 - 40 x 32	40	32	88	92	9	35	14	46

SHORT REDUCTION SLEEVES FOR BIGLIA ETC.

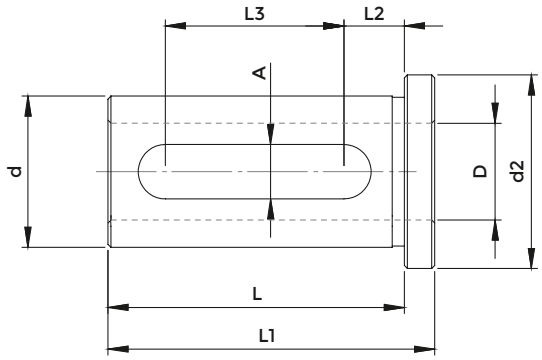

BG.2

COD.	DESCRIPTION	d	D	L	L1	L2	L3	A	d2
0022	BG.2 - 25 x 8	25	8	49	54	10	29,5	9	32
0024	BG.2 - 25 x 10	25	10	49	54	10	29,5	9	32
0025	BG.2 - 25 x 12	25	12	49	54	10	29,5	9	32
0091	BG.2 - 25 x 14	25	14	49	54	10	29,5	9	32
0026	BG.2 - 25 x 16	25	16	49	54	10	29,5	9	32
0092	BG.2 - 25 x 18	25	18	49	54	10	29,5	9	32
0034	BG.2 - 25 x 20	25	20	49	54	10	29,5	9	32

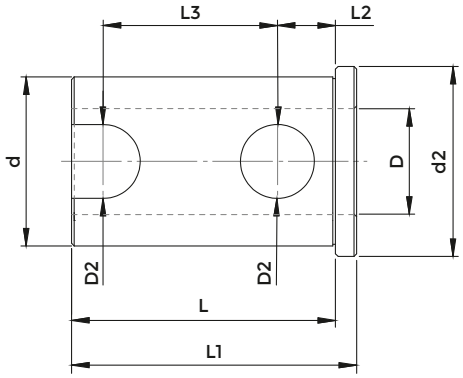

BG.2

COD.	DESCRIPTION	d	D	L	L1	L2	L3	A	d2
1083	BG.2 - 32 x 8	32	8	50	54	9	35	14	36
1236	BG.2 - 32 x 10	32	10	50	54	9	35	14	36
3246	BG.2 - 32 x 12	32	12	50	54	9	35	14	36
2604	BG.2 - 32 x 14	32	14	50	54	9	35	14	36
3247	BG.2 - 32 x 16	32	16	50	54	9	35	14	36
2605	BG.2 - 32 x 18	32	18	50	54	9	35	14	36
3248	BG.2 - 32 x 20	32	20	50	54	9	35	14	36
3249	BG.2 - 32 x 25	32	25	50	54	9	35	14	36
9558	BG.2 - 40 x 8	40	8	50	54	9	35	14	44
9559	BG.2 - 40 x 10	40	10	50	54	9	35	14	44
9560	BG.2 - 40 x 12	40	12	50	54	9	35	14	44
9561	BG.2 - 40 x 14	40	14	50	54	9	35	14	44
9562	BG.2 - 40 x 16	40	16	50	54	9	35	14	44
9563	BG.2 - 40 x 18	40	18	50	54	9	35	14	44
9564	BG.2 - 40 x 20	40	20	50	54	9	35	14	44
9565	BG.2 - 40 x 25	40	25	50	54	9	35	14	44
9566	BG.2 - 40 x 32	40	32	50	54	9	35	14	44

REDUCTION SLEEVES WITH GRAIN ON STOP FOR DOOSAN DAEWOO ETC.

FIG. 1

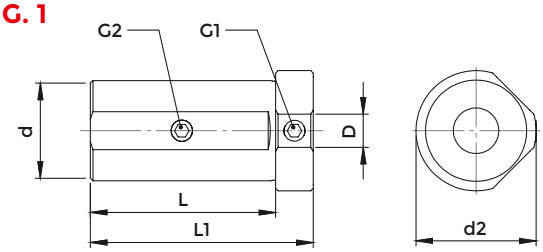

FIG. 2

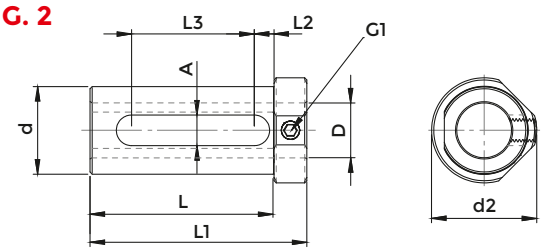

DW.1

COD.	DESCRIPTION	d	D	L	L1	L2	L3	A	d2	FIG.	SCREW 1	SCREW 2
8672	DW.1 - 32 x 10	32	10	79	94	-	-	-	40	1	811-106004	0385
8673	DW.1 - 32 x 12	32	12	79	94		-	-	40	1	811-106004	0385
8674	DW.1 - 32 x 16	32	16	79	94	-	-	-	40	1	811-106004	0385
8675	DW.1 - 32 x 20	32	20	79	94	9,5	60	11	40	2	0385	-
8676	DW.1 - 32 x 25	32	25	79	94	9,5	60	11	40	2	0385	-
165-64089	DW.1 - 40 x 10	40	10	74	89	-	-	-	48	1	811-102037	811-106004
165-64090	DW.1 - 40 x 12	40	12	74	89	-	-	-	48	1	811-102037	811-106004
165-64091	DW.1 - 40 x 16	40	16	74	89	-	-	-	48	1	811-102037	811-106003
165-64092	DW.1 - 40 x 20	40	20	84	99	9	56	14	48	2	811-106004	-
165-64093	DW.1 - 40 x 25	40	25	84	99	9	56	14	48	2	811-106004	-
165-64094	DW.1 - 40 x 32	40	32	84	99	9	56	14	48	2	0385	-

SLOTTED REDUCTION SLEEVES WITH STOP FOR DOOSAN DAEWOO ETC.

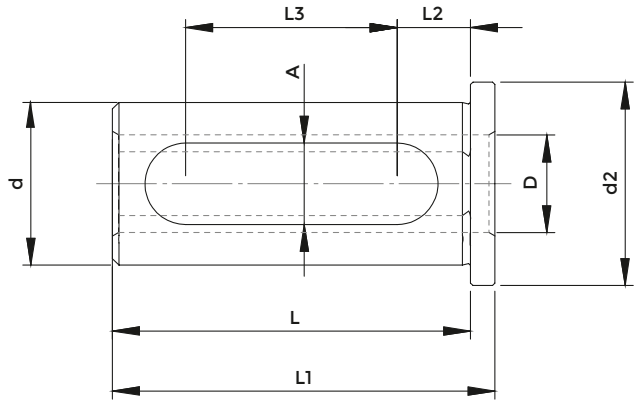

DW.2

COD.	DESCRIPTION	d	D	L	L1	L2	L3	A	d2
115-62027	DW.2 - 20 x 8	20	8	44	47	9,5	25	11	25
115-62028	DW.2 - 20 x 10	20	10	44	47	9,5	25	11	25
115-62029	DW.2 - 20 x 12	20	12	44	47	9,5	25	11	25
8880	DW.2 - 20 x 14	20	14	44	47	9,5	25	11	25
115-62030	DW.2 - 20 x 16	20	16	44	47	9,5	25	11	25
8557	DW.2 - 25 x 8	25	8	54	57	8,5	33	13	30
8558	DW.2 - 25 x 10	25	10	54	57	8,5	33	13	30
8559	DW.2 - 25 x 12	25	12	54	57	8,5	33	13	30
8560	DW.2 - 25 x 14	25	14	54	57	8,5	33	13	30
8561	DW.2 - 25 x 16	25	16	54	57	8,5	33	13	30
8562	DW.2 - 25 x 18	25	18	54	57	8,5	33	13	30
8563	DW.2 - 25 x 20	25	20	54	57	8,5	33	13	30
8564	DW.2 - 32 x 8	32	8	64	68	8,5	42	13	37
8565	DW.2 - 32 x 10	32	10	64	68	8,5	42	13	37
8566	DW.2 - 32 x 12	32	12	64	68	8,5	42	13	37
8567	DW.2 - 32 x 14	32	14	64	68	8,5	42	13	37
8568	DW.2 - 32 x 16	32	16	64	68	8,5	42	13	37
8569	DW.2 - 32 x 18	32	18	64	68	8,5	42	13	37
8570	DW.2 - 32 x 20	32	20	64	68	8,5	42	13	37
8571	DW.2 - 32 x 25	32	25	64	68	8,5	42	13	37
8835	DW.2 - 40 x 12	40	12	74	79	9	51	14	45
8836	DW.2 - 40 x 14	40	14	74	79	9	51	14	45
8837	DW.2 - 40 x 16	40	16	74	79	9	51	14	45
8838	DW.2 - 40 x 18	40	18	74	79	9	51	14	45
165-64095	DW.2 - 40 x 20	40	20	74	79	9	51	14	45
165-64096	DW.2 - 40 x 25	40	25	74	79	9	51	14	45
165-64097	DW.2 - 40 x 32	40	32	74	79	9	51	14	45

REDUCTION SLEEVES FOR MAZAK ETC.

FIG. 1

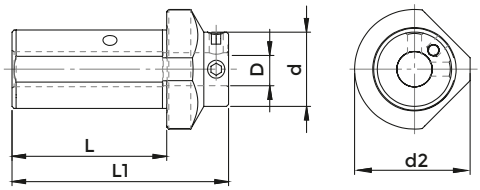

FIG. 2

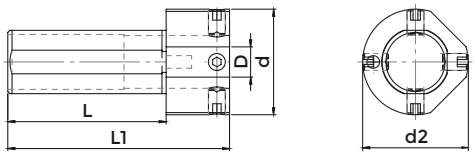

MZ.1

COD.	DESCRIPTION	d	D	L	L1	d2	FIG.	SCREW
165-63241	MZ.1 - 32 x 8	32	8	60	85	50	1	811-102020
165-63242	MZ.1 - 32 x 10	32	10	60	85	50	1	811-102020
165-63243	MZ.1 - 32 x 12	32	12	60	85	50	1	811-102028
165-63244	MZ.1 - 32 x 16	32	16	60	85	50	1	811-106002
165-63245	MZ.1 - 32 x 20	32	20	60	85	50	2	811-102028
165-63246	MZ.1 - 32 x 25	32	25	60	85	50	2	811-102028
165-64114	MZ.1 - 40 x 8	40	8	75	105	58	1	811-102020
165-64115	MZ.1 - 40 x 10	40	10	75	105	58	1	811-102020
165-64116	MZ.1 - 40 x 12	40	12	75	105	58	1	811-102028
165-64117	MZ.1 - 40 x 16	40	16	75	105	58	1	811-106002
165-64118	MZ.1 - 40 x 20	40	20	75	105	58	1	811-102030
165-64119	MZ.1 - 40 x 25	40	25	75	105	58	2	811-102026
165-64120	MZ.1 - 40 x 32	40	32	75	105	58	2	811-102026

SHORT REDUCTION SLEEVES FOR MAZAK ETC.

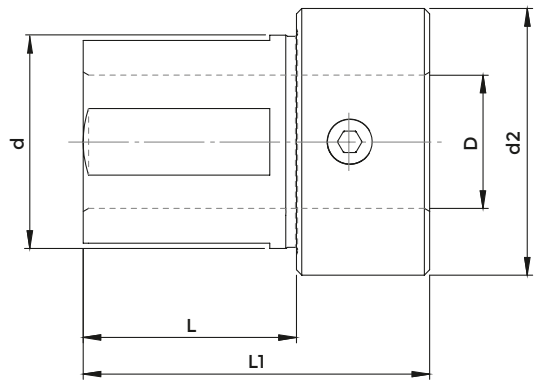

MZ.2

COD.	DESCRIPTION	d	D	L	L1	d2	SCREW
165-63247	MZ.2 - 32 x 20	32	20	40	65	42	811-106002
165-63248	MZ.2 - 32 x 25	32	25	40	65	42	811-102026
165-64121	MZ.2 - 40 x 20	40	20	40	65	50	811-102029
165-64122	MZ.2 - 40 x 25	40	25	40	65	50	811-102028
165-64123	MZ.2 - 40 x 32	40	32	40	65	50	811-106002

MORSE TAPER REDUCTION SLEEVES FOR MAZAK ETC.

FIG. 1

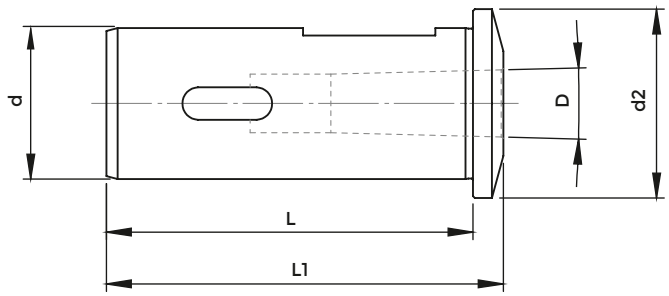

FIG. 2

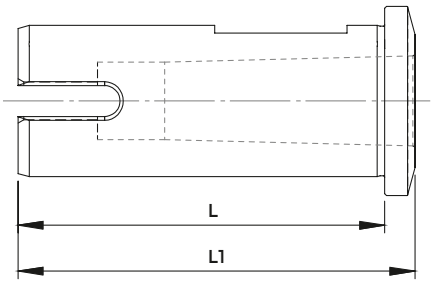

MZ.3

COD.	DESCRIPTION	d	CM	D	L	L1	d2	FIG.
8983	MZ.3 - 32 x 1	32	1	12,065	54	66	42	2
8984	MZ.3 - 32 x 2	32	2	17,78	58	70	42	2
114-34015	MZ.3 - 40 x 1	40	1	12,065	97	105	50	1
114-34016	MZ.3 - 40 x 2	40	2	17,78	97	105	50	1
114-34017	MZ.3 - 40 x 3	40	3	23,825	97	105	50	2

REDUCTION SLEEVES FOR DMG MORI SEIKI ETC.

FIG. 1

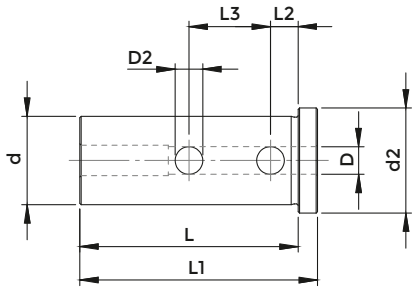

FIG. 2

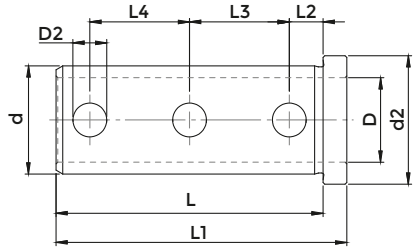

MS.1

COD.	DESCRIPTION	d	D	L	L1	L2	L3	L4	D2	d2	FIG.
7035	MS.1 - 32 x 6	32	6	79	86	10	29,5	-	10	38	1
KMS-T20112	MS.1 - 32 x 8	32	8	79	86	10	29,5	-	10	38	1
KMS-T20114	MS.1 - 32 x 10	32	10	79	86	10	29,5	-	10	38	1
KMS-T20116	MS.1 - 32 x 12	32	12	79	86	10	29,5	29,5	10	38	2
KMS-T20118	MS.1 - 32 x 16	32	16	79	86	10	29,5	29,5	10	38	2
KMS-T20120	MS.1 - 32 x 20	32	20	79	86	10	29,5	29,5	10	38	2
KMS-T20122	MS.1 - 32 x 25	32	25	79	86	10	29,5	29,5	10	38	2
KMS-T20086	MS.1 - 40 x 8	40	8	89	96	10	33	-	12	46	1
KMS-T20088	MS.1 - 40 x 10	40	10	89	96	10	33	-	12	46	1
KMS-T20090	MS.1 - 40 x 12	40	12	89	96	10	33	-	12	46	1
KMS-T20092	MS.1 - 40 x 16	40	16	89	96	10	33	33	12	46	2
KMS-T20094	MS.1 - 40 x 20	40	20	89	96	10	33	33	12	46	2
KMS-T20096	MS.1 - 40 x 25	40	25	89	96	10	33	33	12	46	2
KMS-T20098	MS.1 - 40 x 32	40	32	89	96	10	33	33	12	46	2

SHORT REDUCTION SLEEVES FOR DMG MORI SEIKI ETC.

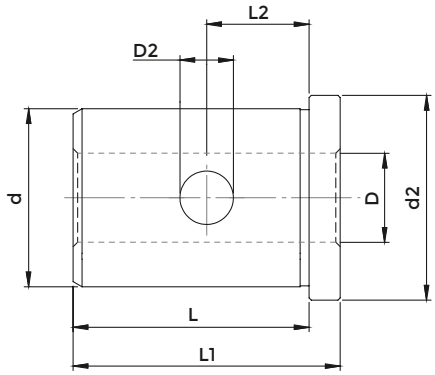

MS.2

COD.	DESCRIPTION	d	D	L	L1	L2	D2	d2
KMS-T22068	MS.2 - 32 x 16	32	16	53	60	20	12	38
KMS-T22052	MS.2 - 32 x 20	32	20	53	60	20	12	38
KMS-T22054	MS.2 - 32 x 25	32	25	53	60	20	12	38
KMS-T20190	MS.2 - 40 x 16	40	16	53	60	23	12	46
KMS-T20104	MS.2 - 40 x 20	40	20	53	60	23	12	46
KMS-T20102	MS.2 - 40 x 25	40	25	53	60	23	12	46
165-64206	MS.2 - 40 x 32	40	32	53	60	23	12	46

SHORT REDUCTION SLEEVES FOR DMG MORI SEIKI ETC.

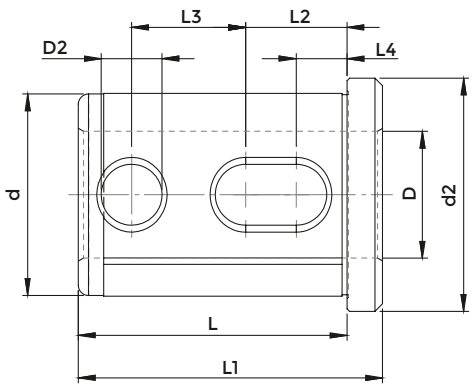

MS.2A

COD.	DESCRIPTION	d	D	L	L1	L2	L3	L4	D2	d2
KMS-T20190-A	MS.2A - 40 x 16	40	16	53	60	20	22,5	-	12	46
KMS-T20104-A	MS.2A - 40 x 20	40	20	53	60	20	22,5	-	12	46
KMS-T20102-A	MS.2A - 40 x 25	40	25	53	60	20	22,5	10	12	46
KMS-T20100-A	MS.2A - 40 x 32	40	32	53	60	20	22,5	10	12	46

MORSE TAPER REDUCTION SLEEVES FOR DMG MORI SEIKI ETC.

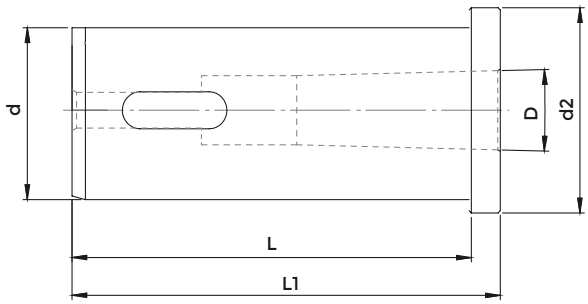

MS.4

COD.	DESCRIPTION	d	CM	D	L	L1	d2
114-34012	MS.4 - 40 x 1	40	1	12,065	89	96	46
KMS-T22046	MS.4 - 40 x 2	40	2	17,78	89	96	46
KMS-T22042	MS.4 - 40 x 3	40	3	23,825	89	108	46
KMS-T22044	MS.4 - 50 x 4	50	4	31,267	89	135	56

THROUGH COOLANT MORSE TAPER REDUCTION SLEEVES FOR DMG MORI SEIKI ETC

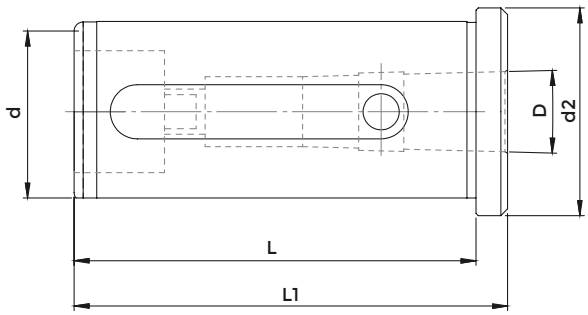

MS.4A

COD.	DESCRIPTION	d	CM	D	L	L1	d2
KMS-T22050-A	MS.4A - 32 x 1	32	1	12,065	78	85	40
KMS-T22048-A	MS.4A - 32 x 2	32	2	17,78	78	85	40
KMS-T22066-A	MS.4A - 40 x 1	40	1	12,065	89	96	46
KMS-T22046-A	MS.4A - 40 x 2	40	2	17,78	89	96	46
KMS-T22042-A	MS.4A - 40 x 3	40	3	23,825	89	96	46
KMS-T22044-A	MS.4A - 40 x 4	40	4	31,267	109	116	46

THROUGH COOLANT EXTENDED REDUCTION SLEEVES FOR DMG MORI SEIKI ETC.

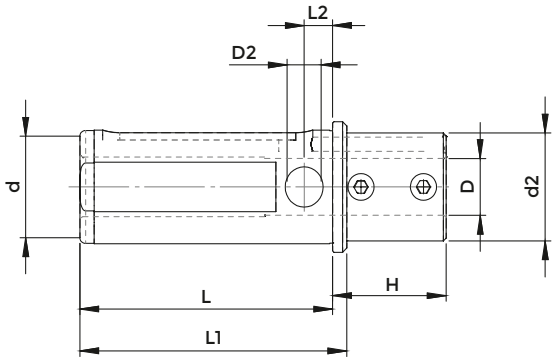

MS.3A

COD.	DESCRIPTION	d	D	L	H	L1	L2	D2	d2	d3	SCREW
KMS-T20106-A	MS.3A - 40 x 8	40	8	89	40	129	10	12	46	38	811-102028
KMS-T20108-A	MS.3A - 40 x 10	40	10	89	40	129	10	12	46	38	811-102028
KMS-T20110-A	MS.3A - 40 x 12	40	12	89	40	129	10	12	46	38	811-102028
KMS-T20194-A	MS.3A - 40 x 16	40	16	89	40	129	10	12	46	38	811-106002
KMS-T20196-A	MS.3A - 40 x 20	40	20	89	40	129	10	12	46	38	811-102026

REDUCTION SLEEVES FOR NAKAMURA TOME ETC.

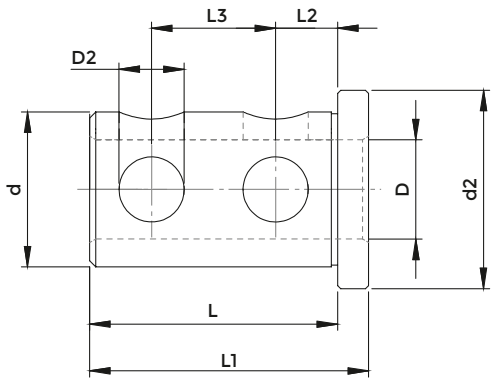

NT.1

COD.	DESCRIPTION	d	D	L	L1	L2	L3	D2	d2
8876	NT.1 - 25 x 10	25	10	40	45	10	20	10,5	32
8877	NT.1 - 25 x 12	25	12	40	45	10	20	10,5	32
8878	NT.1 - 25 x 16	25	16	40	45	10	20	10,5	32
8879	NT.1 - 25 x 20	25	20	40	45	10	20	10,5	32

REDUCTION SLEEVES FOR OKUMA LT 10M / LT 200M ETC.

FIG. 1

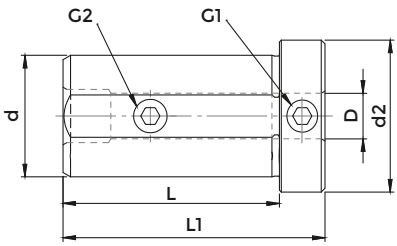

FIG. 2

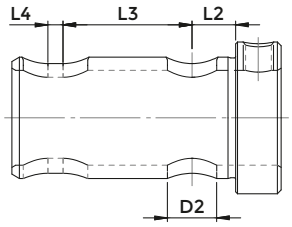

OK.1

COD.	DESCRIPTION	d	D	L	L1	L2	L3	L4	D2	d2	FIG.	SCREW 1	SCREW 2
115-63286	OK.1 - 32 x 8	32	8	57	69	-	-	-	-	40	1	811-102029	811-106002
115-63288	OK.1 - 32 x 10	32	10	57	69	-	-	-	-	40	1	811-102029	811-106002
115-63290	OK.1 - 32 x 12	32	12	57	69	-	-	-	-	40	1	811-102028	811-102026
115-63292	OK.1 - 32 x 16	32	16	59	71	11,5	35	4	13	40	2	811-102028	-
115-63294	OK.1 - 32 x 20	32	20	59	71	11,5	35	4	13	40	2	811-106002	-
115-63296	OK.1 - 32 x 25	32	25	59	71	11,5	35	4	13	40	2	811-102026	-

REDUCTION SLEEVES FOR OKUMA LT 15M / LT 300M ETC.

FIG. 1

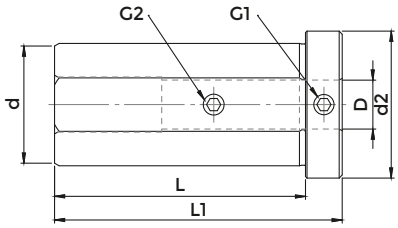

FIG. 2

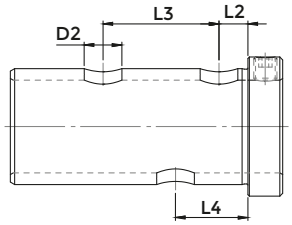

OK.2

COD.	DESCRIPTION	d	D	L	L1	L2	L3	L4	D2	d2	FIG.	SCREW 1	SCREW 2
115-64098	OK.2 - 40 x 12	40	12	82	94	-	-	-	-	48	1	811-102029	811-102028
115-64099	OK.2 - 40 x 16	40	16	82	94	-	-	-	-	48	1	811-102029	811-106002
165-64001	OK.2 - 40 x 20	40	20	82	94	-	-	-	-	48	1	811-102028	811-102026
165-64002	OK.2 - 40 x 25	40	25	82	94	10	40	25	13	48	2	811-102028	-
165-64003	OK.2 - 40 x 32	40	32	82	94	10	40	25	13	48	2	811-102026	-

REDUCTION SLEEVES FOR OKUMA LB 15 II ETC.

FIG. 1

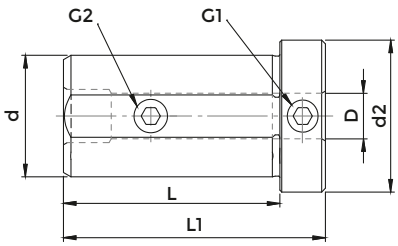

FIG. 2

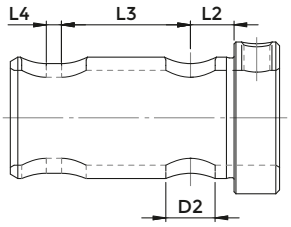

OK.4

COD.	DESCRIPTION	d	D	L	L1	L2	L3	L4	D2	D3	d2	FIG.	SCREW 1	SCREW 2
165-64013	OK.4 - 40 x 10	40	10	80	95	-	-	-	-	-	48	1	811-102030	811-102028
165-64014	OK.4 - 40 x 12	40	12	80	95	-	-	-	-	-	48	1	811-102037	811-106004
165-64015	OK.4 - 40 x 16	40	16	80	95	-	-	-	-	-	48	1	811-102037	811-106003
165-64016	OK.4 - 40 x 20	40	20	80	95	-	-	-	-	-	48	1	811-106004	0385
165-64017	OK.4 - 40 x 25	40	25	68	80	11,5	42	15	16	13	48	2	811-106002	-
165-64018	OK.4 - 40 x 32	40	32	68	80	11,5	42	15	16	13	48	2	811-102026	-

REDUCTION SLEEVES FOR OKUMA MACTURN 250 / MULTUS ETC.

FIG. 1

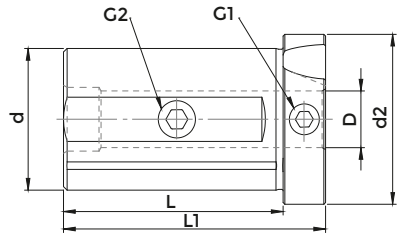

FIG. 2

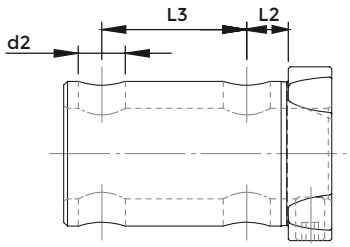

OK.7

COD.	DESCRIPTION	d	D	L	L1	L2	L3	D2	d2	FIG.	SCREW 1	SCREW 2
165-64004	OK.7 - 40 x 10	40	10	62	74	-	-	-	48	1	811-102029	811-102028
165-64125	OK.7 - 40 x 12	40	12	62	74	-	-	-	48	1	811-102029	811-102028
165-64126	OK.7 - 40 x 16	40	16	62	74	-	-	-	48	1	811-102029	811-106003
165-64127	OK.7 - 40 x 20	40	20	62	74	-	-	-	48	1	811-102028	811-106003
165-64128	OK.7 - 40 x 25	40	25	62	74	11,5	40	13	48	2	811-102028	-
165-64129	OK.7 - 40 x 32	40	32	62	74	11,5	40	13	48	2	811-102026	-

FAMUP RAG TYPE SHANK ER COLLET CHUCKS

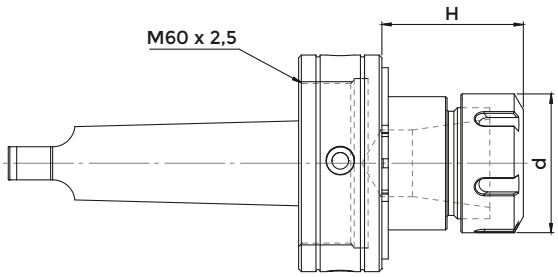

RAG

COD.	DESCRIPTION	ER	H	d	NUT 1	NUT 2	WRENCH	COLLET
4277	CM4 FAMUP RAG - ER 32	ER 32 2÷25	52	50	2420	4996	3670	0988
4280	CM4 FAMUP RAG - ER 40	ER 40 3÷32	55	63	2420	4997	3671	0821

EQUIPMENT CASES WITH REDUCED SET OF ER COLLETS

COD.	DESCRIPTION	CHUCK	CASE	WRENCH	COLLET
7531	KIT Rid CM 4 RAG - ER 32	4277	7023	3670	0988: Ø 4 - 6 - 8 10 -12 -16 - 20
7721	KIT Rid CM 4 RAG - ER 40	4280	7024	3671	0821: Ø 4 - 6 - 8 10 -12 -16 - 20 -25

EQUIPMENT CASES WITH COMPLETE SET OF ER COLLETS

COD.	DESCRIPTION	CHUCK	CASE	WRENCH	COLLET
7515	KIT CM 4 RAG - ER 32	4277	7023	3670	0988: Ø 3 ÷ 20 (18 Pinze)
7722	KIT CM 4 RAG - ER 40	4280	7024	3671	0821: Ø 4 ÷ 26 (23 Pinze)

FAMUP RAG TYPE SHANK SHELL MILL HOLDERS

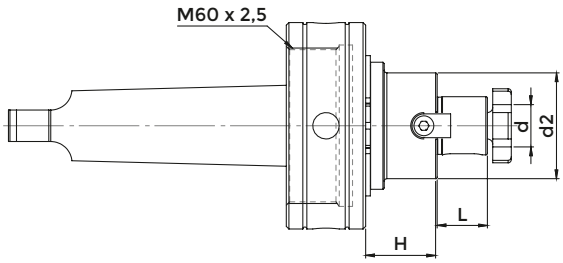

RAG

COD.	DESCRIPTION	d	H	L	d2	NUT	CROSS SCREW	KEY	WRENCH
2414	CM 4 RAG - D. 16 FISSO	16	27	17	32	2420	4985	0041	4562
2415	CM 4 RAG - D. 22 FISSO	22	27	19	40	2420	4986	0044	4563
2416	CM 4 RAG - D. 27 FISSO	27	27	21	48	2420	4987	0045	4564
2417	CM 4 RAG - D. 32 FISSO	32	27	24	58	2420	4988	0047	4565

BIMAK TYPE SHANK ER COLLET CHUCKS

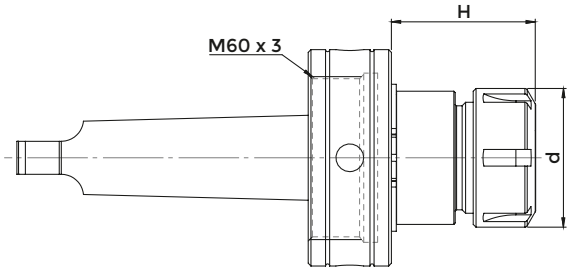

BIMAK

COD.	DESCRIPTION	ER	H	d	NUT 1	NUT 2	WRENCH	COLLET
4281	CM 4 BIMAK - ER 32	ER 32 2÷25	52	50	2423	4996	3670	0988
4354	CM 4 BIMAK - ER 40	ER 40 3÷32	55	63	2423	4997	3671	0821

EQUIPMENT CASES WITH REDUCED SET OF ER COLLETS

COD.	DESCRIPTION	CHUCK	CASE	WRENCH	COLLET
7723	KIT Rid CM 4 BIMAK-ER 32	4281	7023	3670	0988: Ø 4 - 6 - 8 10 -12 -16 - 20
7724	KIT Rid CM 4 BIMAK-ER 40	4354	7024	3671	0821: Ø 4 - 6 - 8 10 -12 -16 - 20 -25

EQUIPMENT CASES WITH COMPLETE SET OF ER COLLETS

COD.	DESCRIPTION	CHUCK	CASE	WRENCH	COLLET
7725	KIT CM 4 BIMAK-ER 32	4281	7023	3670	0988: Ø 3 ÷ 20 (18 Pinze)
7726	KIT CM 4 BIMAK-ER 40	4354	7024	3671	0821: Ø 4 ÷ 26 (23 Pinze)

BIMAK TYPE SHANK SHELL MILL HOLDERS

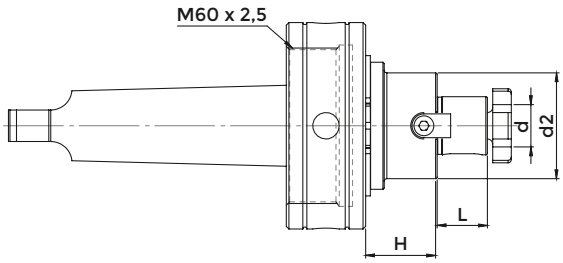

BIMAK

COD.	DESCRIPTION	d	H	L	d2	NUT	CROSS SCREW	KEY	WRENCH
2260	CM 4 BIMAK - D. 16 FISSO	16	27	17	32	2423	4985	0041	4562
2261	CM 4 BIMAK - D. 22 FISSO	22	27	19	40	2423	4986	0044	4563
2262	CM 4 BIMAK - D. 27 FISSO	27	27	21	48	2423	4987	0045	4564
2263	CM 4 BIMAK - D. 32 FISSO	32	27	24	58	2423	4988	0047	4565

BRIDGEPORT R8 COLLET

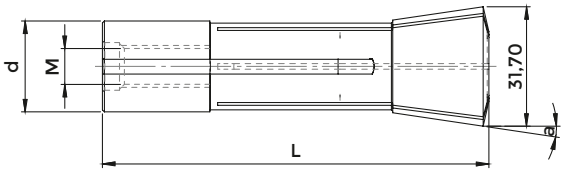

BRIDGEPORT - R8

COD.	DESCRIPTION	ER	d	d2	L	a	M	EINHEITS
0716	PINZA R8	2,0 ÷ 22	24,12	32	106	8° 35'	7/16 - 20"	369E

ER COLLET CHUCKS

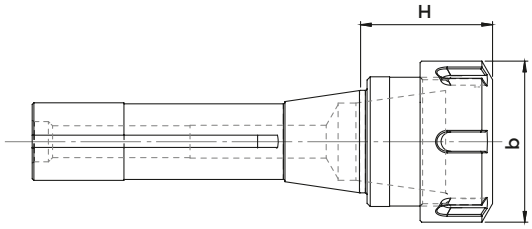

BRIDGEPORT - R8

COD.	DESCRIPTION	ER	H	d	NUT	WRENCH	COLLET
2973	PORTAPINZA R8 - ER 32	ER 32 2÷25	40	50	4996	3670	0988
2974	PORTAPINZA R8 - ER 40	ER 40 3÷32	73	63	4997	3671	0821

EQUIPMENT CASES WITH REDUCED SET OF ER COLLETS

COD.	DESCRIPTION	CHUCK	CASE	WRENCH	COLLET
7668	KIT Rid R 8 ER 32	2973	7023	3670	0988: Ø 4 - 6 - 8 10 -12 -16 - 20

EQUIPMENT CASES WITH COMPLETE SET OF ER COLLETS

COD.	DESCRIPTION	CHUCK	CASE	WRENCH	COLLET
7669	KIT R 8 ER 32	2973	7023	3670	0988: Ø 3 ÷ 20 (18 Pinze)

DRILL CHUCKS - RIGHT SPIN

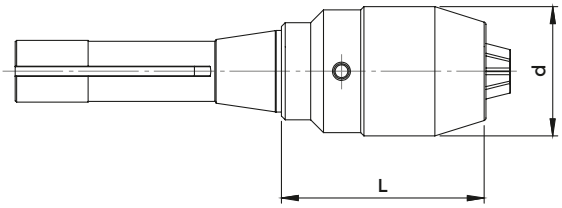

BRIDGEPORT - R8

COD.	DESCRIPTION	Ø PUNTA	d	H	WRENCH
3000	R 8 - DC 13	0,5 ÷ 13	50	81	2370

Suitable wrench included in delivery

SHANKS FOR DRILL CHUCKS DIN 238 / ISO 239 TYPE

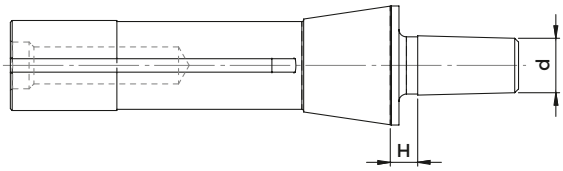

BRIDGEPORT - R8

COD.	DESCRIPTION	d	H	DIN 238
1089	R 8 - B 16	15,733	10	B 16

FACE MILL HOLDERS

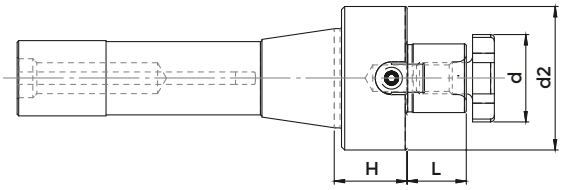

BRIDGEPORT - R8

COD.	DESCRIPTION	d	H	L	d2	CROSS SCREW	WRENCH
2978	PORTAFRESA R8 - D. 16	16	19	17	38	4985	4562
2979	PORTAFRESA R8 - D. 22	22	23	19	46	4986	4563
2980	PORTAFRESA R8 - D. 27	27	23	21	48	4987	4564
2981	PORTAFRESA R8 - D. 32	32	24	24	58	4988	4565

ADAPTERS TO MORSE TAPER

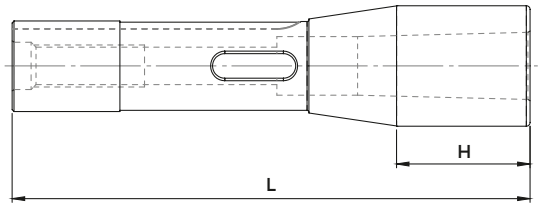

BRIDGEPORT - R8

COD.	DESCRIPTION	CM	L	H
2975	RIDUZIONE R8 - CM 1 PUNTE	1	114	22
2976	RIDUZIONE R8 - CM 2 PUNTE	2	127	35
2977	RIDUZIONE R8 - CM 3 PUNTE	3	153	48
2993	RIDUZIONE R8 - CM 4 PUNTE	4	240	61

LONGITUDINAL MOUNTING TOOLHOLDERS BORING BAR FOR TURRETS

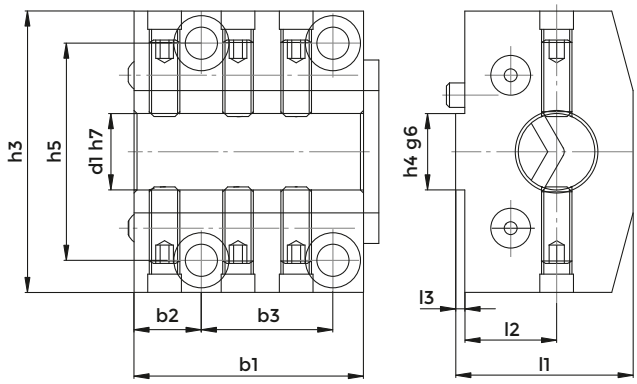

DIN 69880 - PU1

COD.	D	h3	h4	h5	b1	b2	b3	l1	l2	l3
PU1-20-25	25	74	20	57	60	17.5	34	48	25	3
PU1-20-32	32	74	20	57	60	17.5	34	48	25	3
PU1-20-40	40	74	20	57	60	17.5	34	60	32	3
PU1-25-20	20	92	25	71	75	22	43	58	30	3
PU1-25-25	25	92	25	71	75	22	43	58	30	3
PU1-25-32	32	92	25	71	75	22	43	58	30	3
PU1-25-40	40	92	25	71	75	22	43	58	30	3
PU1-25-50	50	92	25	71	75	22	43	73	38	3
PU1-32-25	25	115	32	90	95	26	57	73	35	3
PU1-32-32	32	115	32	90	95	26	57	73	35	3
PU1-32-40	40	115	32	90	95	26	57	73	35	3
PU1-32-50	50	115	32	90	95	26	57	73	35	3
PU1-32-60	60	115	32	90	95	26	57	83	40	3

ACCESSORIES p. 705

LONGITUDINAL MOUNTING SQUARE TOOL HOLDERS FOR TURRETS

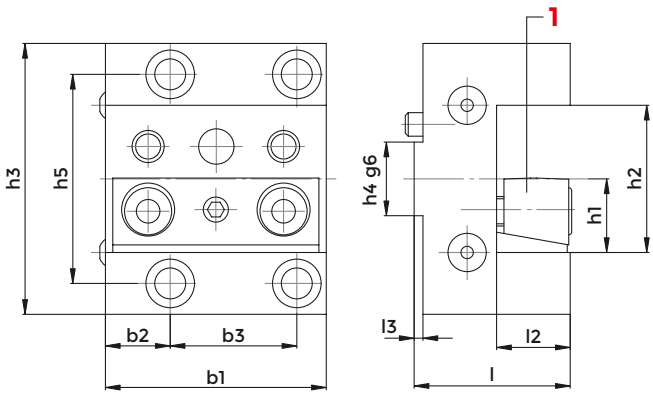

DIN 69880 - PU2

COD.	h1	h2	h3	h4	h5	b1	b2	b3	l1	L2	l3	1 LOCKING WEDGE
PU2-20-20	20	40	74	20	57	60	17.5	34	43	20	3	832-007160
PU2-25-25	25	50	92	25	71	75	22	43	53	25	3	832-007010
PU2-32-32	32	64	115	32	90	95	26	57	63	32	3	832-007170

TOOLHOLDERS FOR BIGLIA B 1000 LATHES

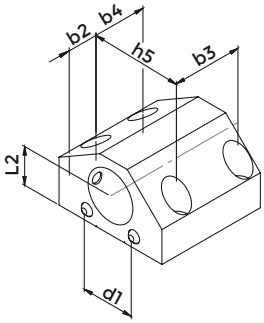

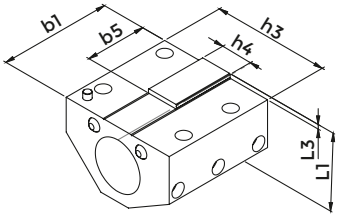

COD.	DESCRIPTION	d	h3	h4	h5	b1	b2	b3	b4	b5	L1	L2	L3
5799	BIGLIA 10.57.20.01	32	92	25	72	88	23	55	42	48	61,5	30	3,5
5800	BIGLIA 10.57.20.02	40	92	25	72	88	23	55	42	48	61,5	30	3,5

TOOLHOLDERS FOR BIGLIA B 56 AND B500 LATHES

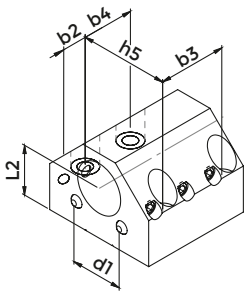

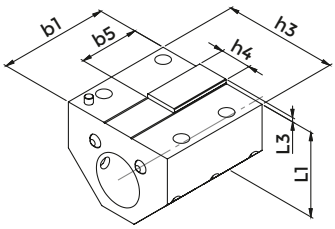

COD.	DESCRIPTION	d	h3	h4	h5	b1	b2	b3	b4	b5	L1	L2	L3
5830	BIGLIA 10.57.20.14	32	92	25	72	88	23	55	42	48	71,5	40	3,5
5831	BIGLIA 10.57.20.16	40	92	25	72	88	23	55	42	48	71,5	40	3,5

STRAIGHT SHANK ROTARY BAR-STOP

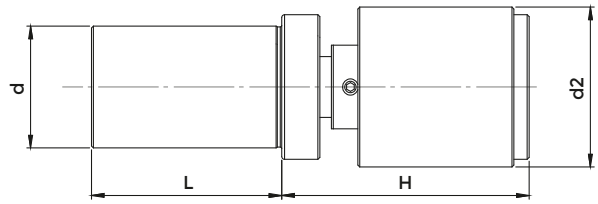

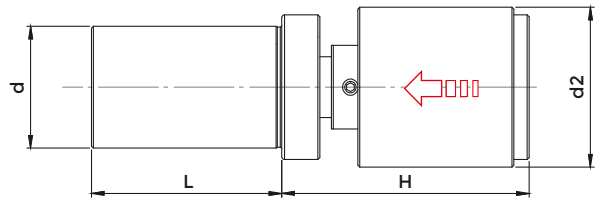

ADJUSTABLE

COD.	d	L	H	d2
1520	16	32	36 - 62	20
1447	20	50	62 -100	34
1448	22	50	62 -100	34
1449	25	50	62 -100	34
1459	25	50	62 -100	42
1460	25	50	62 -100	56
1450	25,4	50	62 -100	34
1730	30	50	62 -100	42
1735	30	50	62 -100	56
1732	32	50	62 -100	42
1773	32	50	62 -100	56
1736	40	70	62 -100	42
1797	40	70	62 -100	56

DAMPED

COD.	d	L	H	d2
2629	20	35	62 - 90	34
2630	20	50	62 -100	34
2635	25	50	62 -100	34
2421	25	50	62 -100	42
2447	25	50	62 -100	56
1537	30	50	62 -100	42
1552	30	50	62 -100	56
1560	31,75	50	62 -100	42
1025	32	50	62 -100	42
1063	32	50	62 -100	56
1061	40	70	62 -100	42
1073	40	70	62 -100	56

CHARACTERISTICS:

unlike normal rotary bar stop, inside damped model, besides radial bearing and thrust bearing, there is a set of spring wa-shers in order to absorb well any bar shoves.

STRAIGHT SHANK FLOATING REAMER HOLDERS WITH ER COLLET

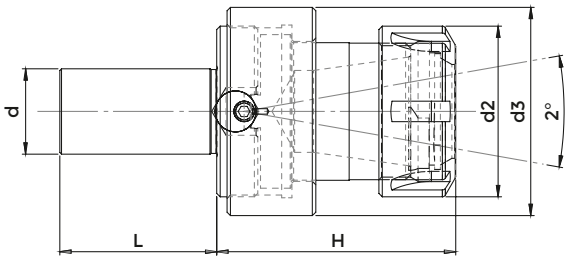

DIN 1835 A

COD.	DESCRIPTION	ER	d	d2	d3	H	L	NUT	WRENCH	COLLET
1152	d 16 RM - ER 16	ER 16 1÷12	16	32	40	50	46	4993	3698	0364
1173	d 16 RM - ER 20	ER 20 1÷15	16	35	40	55	46	4994	3699	0787
1176	d 19,05 RM - ER 16	ER 16 1÷12	19,05	32	40	50	46	4993	3698	0364
1340	d 19,05 RM - ER 20	ER 20 1÷15	19,05	35	40	55	46	4994	3699	0787
1227	d 20 RM - ER 16	ER 16 1÷12	20	32	40	50	46	4993	3698	0364
1573	d 20 RM - ER 20	ER 20 1÷15	20	35	40	55	46	4994	3699	0787
1237	d 20 RM - ER 25	ER 25 1÷20	20	42	61	58	46	4995	3669	0996
1241	d 25 RM - ER 20	ER 20 1÷15	25	35	40	55	46	4994	3699	0787
1242	d 25 RM - ER 25	ER 25 1÷20	25	42	61	58	46	4995	3669	0996
1341	d 25 RM - ER 32	ER 32 2÷25	25	50	61	70	46	4996	3670	0988
1342	d 25,4 RM - ER 32	ER 32 2÷25	25,4	50	61	70	46	4996	3670	0988
1895	d 32 RM - ER 32	ER 32 2÷25	32	50	61	70	50	4996	3670	0988

ACCESSORIES

p. 635

p. 617

p. 638

STRAIGHT SHANK FLOATING REAMER HOLDERS WITH ER COLLET

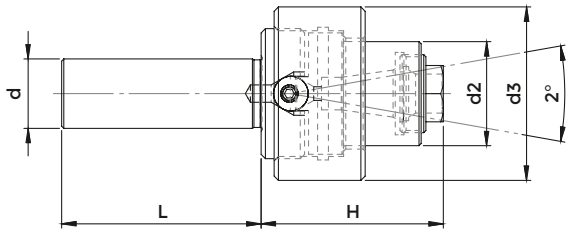

DIN 1835 A

COD.	DESCRIPTION	ER	d	d2	d3	H	L	NUT	WRENCH	COLLET
1141	d 16 RM - ER 11	ER 11 1÷ 8	16	24	40	42	46	2601	3169	5573
1213	d 20 RM - ER 11	ER 11 1÷ 8	20	24	40	42	46	2601	3169	5573

ACCESSORIES

p. 637

p. 617

p. 637

FIXED THREADING DIE HOLDERS

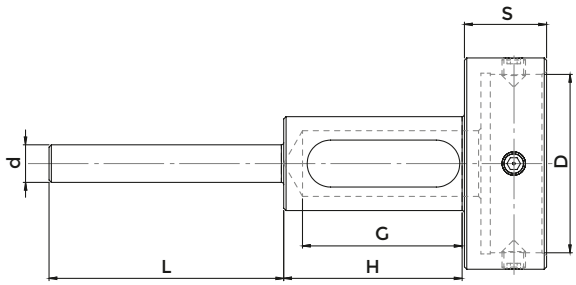

FRONT FIXING - LATERAL FIXING

COD.	DESCRIPTION	D	S	d	H	L	G
1093	P/FILIERA FISSO con bloccaggio universale - D.16x5	16	5	8	40	40	34
1075	P/FILIERA FISSO con bloccaggio universale - D.20x5	20	5	8	43	45	40
1095	P/FILIERA FISSO con bloccaggio universale - D.20x7	20	7	8	43	45	38
1103	P/FILIERA FISSO con bloccaggio universale - D.25x9	25	9	8	50	45	45
1105	P/FILIERA FISSO con bloccaggio universale - D.30x11	30	11	8	50	45	45
1125	P/FILIERA FISSO con bloccaggio universale - D.38x10	38	10	8	56	50	51
1107	P/FILIERA FISSO con bloccaggio universale - D.38x14	38	14	8	56	50	52

FIXED THREADING DIE HOLDERS

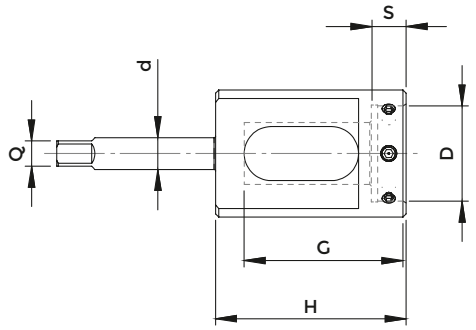

OVERSIZE

COD.	DESCRIPTION	D	S	d	Q	H	G
2540	P/FILIERA MAGGIORATO - D.20x7	20	7	9	7	60	49
2536	P/FILIERA MAGGIORATO - D.25x9	25	9	9	7	60	51
2537	P/FILIERA MAGGIORATO - D.30x11	30	11	10	8	60	51
2538	P/FILIERA MAGGIORATO - D.38x10	38	10	10	8	60	54
2544	P/FILIERA MAGGIORATO - D.38x14	38	14	12	9	60	54
2539	P/FILIERA MAGGIORATO - D.45x14	45	14	12	9	66	59
2558	P/FILIERA MAGGIORATO - D.45x18	45	18	14	11	66	59

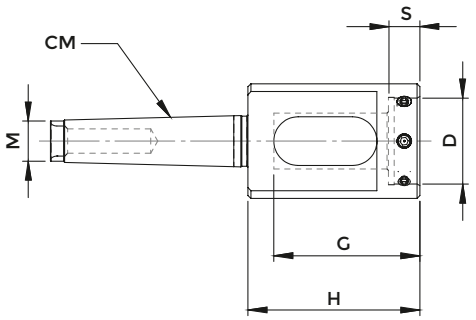

MORSE TAPER SHANK

COD.	DESCRIPTION	D	S	CM	M	H	G
2727	P/FILIERA con attacco CM.2 A - D.16x5	16	5	2	M 10	60	51
2728	P/FILIERA con attacco CM.2 A - D.20x7	20	7	2	M 10	60	49
2729	P/FILIERA con attacco CM.2 A - D.20x7	25	9	2	M 10	60	51
2731	P/FILIERA con attacco CM.2 A - D.30x11	30	11	2	M 10	60	51
2735	P/FILIERA con attacco CM.2 A - D.38x10	38	10	2	M 10	60	54
2767	P/FILIERA con attacco CM.2 A - D.38x14	38	14	2	M 10	60	54
2776	P/FILIERA con attacco CM.2 A - D.45x14	45	14	2	M 10	66	59
2786	P/FILIERA con attacco CM.2 A - D.45x18	45	18	2	M 10	66	59

READY, ALWAYS.